Rev. 1

Consolidated®

INSTALLATION, OPERATION AND MAINTENANCE MANUAL

MPV™
Modular Pilot Valve
Types 49PV07, 49MV07, and 49MV72

Consolidated®
Pilot Operated Safety Relief Valve
4900 Series

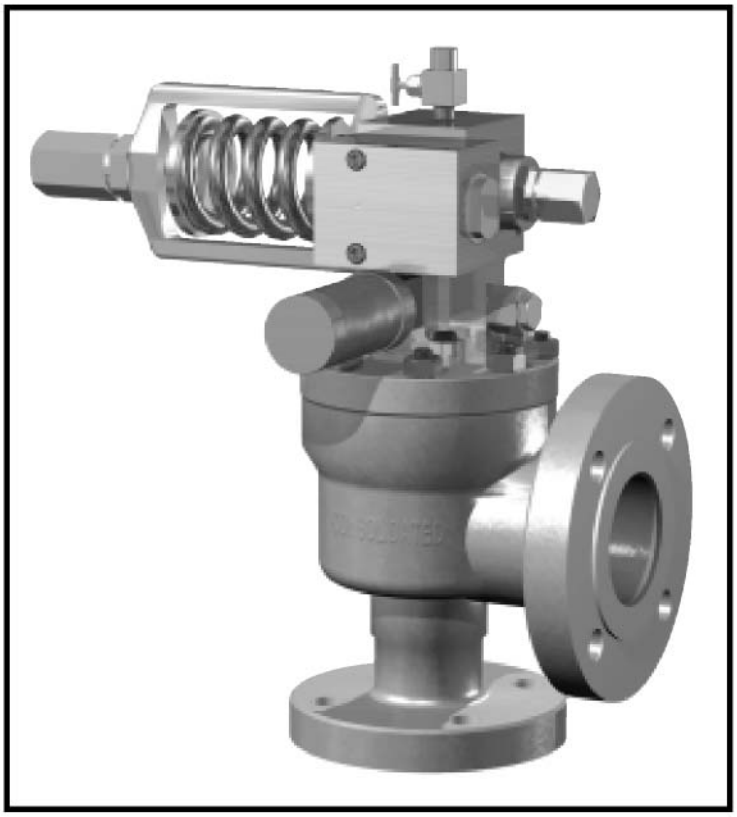

Series 4900

- with Pressure Differential Switch option

DRESSER
Flow Control

Dresser, Inc.
Alexandria, Louisiana
71309-1430 (USA)

CON-37
Revised 7/01

Product Safety Sign and Label System

If and when required, appropriate safety labels have been included in the rectangular margin blocks throughout this manual. Safety labels are vertically oriented rectangles as shown in the represented examples (below), consisting of three panels encircled by a narrow border. The panels can contain four messages which communicate:

- The level of hazard seriousness.
- The nature of the hazard.
- The consequence of human or product interaction with the hazard.
- The instructions, if necessary, on how to avoid the hazard.

ATTENTION
Hazards or unsafe practices which could result in product or property damage.

CAUTION
Hazards or unsafe practices which could result in minor personal injury.

WARNING
Hazards or unsafe practices which could result in severe personal injury or death.

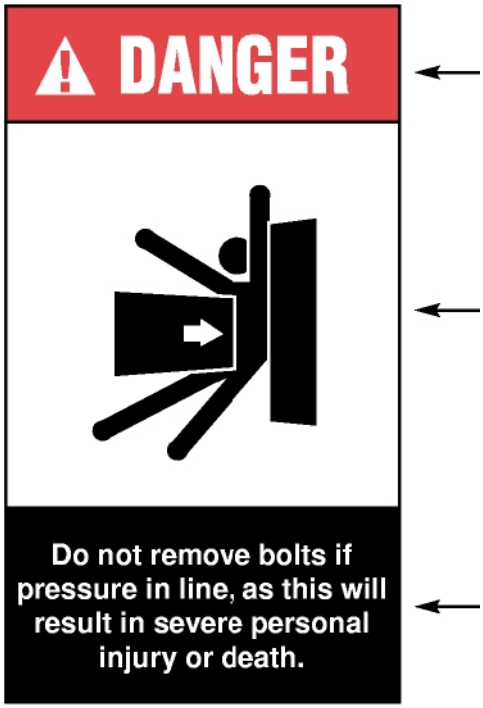

DANGER
Immediate hazards which WILL result in severe personal injury or death.

The top panel of the format contains a signal word (DANGER, WARNING, CAUTION or ATTENTION) which communicates the level of hazard seriousness.

The center panel contains a pictorial which communicates the nature of the hazard, and the possible consequence of human or product interaction with the hazard. In some instances of human hazards the pictorial may, instead, depict what preventive measures to take, such as wearing protective equipment.

The bottom panel may contain an instruction message on how to avoid the hazard. In the case of human hazard, this message may also contain a more precise definition of the hazard, and the consequences of human interaction with the hazard, then can be communicated by the pictorial.

Table of Contents

i. Safety Notice

Proper installation and maintenance is essential to the safe and reliable operation of all valve products. The relevant procedures recommended by Dresser, and described in this manual, are effective methods of performing the required tasks. Some of these procedures require the use of tools specifically designed for an intended purpose. These special tools should be used when, and as, recommended.

It is important to note that this manual contains various “safety messages” which should be carefully read in order to minimize the risk of personal injury, or the possibility that improper procedures will be followed which may damage the involved Dresser product, or render it unsafe. It is also important to understand that these “safety messages” are not exhaustive. Dresser cannot possibly know, evaluate, and advise any customer of all of the conceivable ways in which tasks might be performed, or of the possible hazardous consequences of each way. Consequently, Dresser has not undertaken any such broad evaluation and, thus, anyone who uses a procedure and/or tool, which is not recommended by Dresser, or deviates from Dresser recommendations, must be thoroughly satisfied that neither personal safety, nor valve safety, will be jeopardized by the method and/or tools selected. If not so satisfied, contact Dresser (at 318/640-2250) if there are any questions relative to tools/methods. Some of the products manufactured by Dresser may be used in radioactive environments. Consequently, prior to starting any operation in a radioactive environment, the proper “health physics” procedures should be consulted and followed, if applicable.

The installation, operation and maintenance of valves and/or valve products may involve proximity to fluids at extremely high pressure and/or temperature. Consequently, every precaution should be taken to prevent injury to personnel during the performance of any procedure. These precautions should consist of, but are not limited to, ear drum protection, eye protection, and the use of protective clothing. (i.e., gloves, etc.) when personnel are in or around a valve work area. Due to the various circumstances and conditions in which these operations may be performed on

Dresser products, and the possible hazardous consequences of each way, Dresser cannot possibly evaluate all conditions that might injure personnel or equipment. Nevertheless, Dresser does offer certain safety precautions listed on this page for customer information only.

It is the responsibility of the purchaser or user of Dresser valves/equipment to adequately train all personnel who will be working with the involved valves/equipment. Further, ***prior*** to working with the involved valves/equipment, personnel who are to perform such work should become thoroughly familiar with the contents of this manual. Accordingly, should additional copies of this manual be required, they can be purchased, at a minimal cost, by contacting Dresser (in writing) at P.O. Box 1430, Alexandria, LA 71309-1430, or (telephonically) at 318/640-2250.

ii. Safety Precautions

Follow all plant safety regulations, but ***be sure*** to observe the following:

- ***Always*** lower the working pressure before making any valve adjustment.
- Do not stand in front of the discharge side of a safety relief valve when testing or operating.
- When removing a valve from a system for disassembly, stand clear and/or wear protective clothing to prevent exposure to splatter of any corrosive process medium which may have been trapped inside the valve. Ensure the valve is isolated from system pressure ***before*** the valve is removed.
- Allow the system to cool to room temperature before cleaning, servicing or repairing the system. Hot components or fluids can cause severe personal injury or death.
- Hearing and eye protection should be used when testing or operating a valve.
- Wear protective clothing. Hot water can burn and superheated steam is not visible.
- Exercise care when examining a valve for visible or audible leakage.
- Never use pressurized fluids, gas or air to clean clothing or body parts. Never use body parts to check for leaks. Pressurized fluids, gas or air injected into or near the body can cause severe personal injury or death.

• Use of improper tools or improper use of right tools could result in personal injury or product/property damage. Heed all service manual warnings and read installation instructions before installing valve(s).

• It is the responsibility of the owner to specify and provide guarding to protect persons from pressurized or heated parts. Contact with such parts can lead to severe personal injury or death.

• All valves require periodic inspection and tests by qualified persons to insure that the valves are in proper working condition and will function as designed by Dresser. The owner/operator of the valves must be aware of usage conditions and must bear the responsibility for determining the appropriate frequency of examination of the valves.

iii. Warranty Information

Warranty Statement

Dresser warrants that its products and work will meet all applicable specifications and other specific product and work requirements (including those of performance), if any, and will be free from defects in material and workmanship. Refer to Dresser's Standard Terms of Sale or specific contract details on warranty and limitation of remedy and liability.

Defective and nonconforming items must be held for Dresser's inspection and returned to the original F.O.B. point upon request.

Warranty Claims

Warranty claims must be made immediately upon discovery and in any event, within thirty (30) months of shipment of the applicable product (at F.O.B. shipping point), or within twenty-four (24) months from the date of installation, whichever is earlier. For all other details on warranty, limitation of remedy, liability of remedy and liability, please refer to Dresser's Standard Terms of Sale.

Incorrect Selection or Misapplication of Products

Dresser cannot be responsible for customer's incorrect selection or misapplication of our products.

Unauthorized Repair Work

Dresser has not authorized any non-Dresser **Con-**

affiliated repair companies, contractors or individuals to perform warranty repair service on new products or field repaired products of its manufacture. Therefore, customers contracting such repair services from unauthorized sources must do so at their own risk.

Unauthorized Removal of Seals

All new valves and valves repaired in the field by Dresser Field Service are sealed to assure the customer of our guarantee against defective workmanship. Unauthorized removal and/or breakage of this seal will negate our warranty.

I. Terminology for Safety Relief Valves

- **Accumulation**

Accumulation is the pressure increase over the maximum allowable working pressure of the vessel during discharge through the pressure relief valve, expressed as a percentage of that pressure or in pounds per square inch.

- **Back Pressure**

Back pressure is the pressure at the discharge side of a pressure relief valve, distinguished as follows:

-Superimposed Back Pressure: the pressure in the discharge header before the valve opens

a) Constant Superimposed: this type of back pressure remains essentially at a fixed value (constant) and exists (superimposed) continuously prior to and during the opening of the valve.

b) Variable Superimposed: this type of back pressure varies or changes over a range from a minimum to a maximum, or vice versa. The actual back pressure at any specific time depends on conditions in the piping system to which the outlet of the valve is connected.

- **Built-up Back Pressure:** the pressure which develops at the valve outlet as a result of flow after the valve is opened.

- **Blowdown**

Blowdown is the difference between set pressure and reseating pressure of a pressure relief valve, expressed as a percentage of the set pressure, or actual pressure units.

Valve Terminology (cont'd.)

- **Bore Area**

The bore area is the minimum cross-sectional flow area of a nozzle.

- **Differential Between Operating and Set Pressures**

Valves in process service will generally give best results if the operating pressure does not exceed 90% of the set pressure. On pump and compressor discharge lines, however, the differential required between the operating and set pressures may be greater because of pressure pulsations coming from a reciprocating piston. It is recommended that the valve be set as high above the operating pressure as possible.

- **Disc**

A disc is the pressure-containing movable element of a pressure relief valve that affects closure.

- **Lift**

Lift is the actual travel of the disc away from closed position when a valve is relieving.

- **Maximum Allowable Working Pressure** Maximum allowable working pressure is the maximum gauge pressure permissible in a vessel at a designated temperature. A vessel may not be operated above this pressure, or its equivalent, at any metal temperature other than that used in its design. Consequently, for that metal temperature, it is the highest pressure at which the primary pressure safety relief valve is set to open.

- **Nozzle**

A nozzle is a pressure-containing element that constitutes the inlet flow passage and includes the fixed portion of the seat closure.

- **Operating Pressure**

The operating pressure is the gauge pressure to which the vessel is normally subjected in service. A suitable margin is provided between operating pressure and maximum allowable working pressure. For assured safe operation, the operating pressure should be at least 10% under the maximum allowable working pressure or 5 psi (.34 bar), whichever is greater.

- **Overpressure**

Overpressure is a pressure increase over the set pressure of the primary relieving device. Overpressure is similar to accumulation when the relieving device is set at the maximum allowable working pressure of the vessel.

Normally, overpressure is expressed as a percentage of set pressure.

- **Pilot Operated Safety Relief Valve**

A pilot operated safety relief valve is a safety relief valve in which the major relieving device is combined with and is controlled by a self actuated auxiliary pressure relief valve.

- **Pressure Relief Device**

A relief valve is an automatic pressurerelieving device, actuated by static pressure upstream from the valve; a relief valve is used primarily for liquid service.

- **Rated Capacity**

Rated capacity is the percentage of measured flow at an authorized percent overpressure permitted by the applicable code. Rated capacity is generally expressed in pounds per hour (lb/hr) for vapors; standard cubic feet per minute (SCFM) or m^3/min for gases; and in gallons per minute (GPM) for liquids.

- **Seat**

The seat is the pressure-containing contact between the fixed and moving portions of the pressure-containing elements of a valve.

- **Set Pressure**

Set pressure is the gauge pressure at the valve inlet, for which the pressure relief valve has been adjusted to open under service conditions. In liquid service, set pressure is determined by the inlet pressure at which the valve starts to discharge.

In gas or vapor service, the set pressure is determined by the inlet pressure at which the valve pops.

II. General Handling, Storage and Preinstallation

A. Handling

Flanged valves, either crated or uncrated, should always be kept with the inlet flange down, in the normal installation position, to prevent possible misalignment and damage to internals. The valve should never be laid on its side.

Pressure relief valves, either crated or uncrated, should never be subjected to sharp impact. Particular care should be exercised when the valve is being loaded onto or unloaded from a truck, and when it is being hoisted into position for installation.

Handling, Storage . . . (cont'd.)

Never attempt to lift the full weight of the valve by the pilot assembly, external devices or tubing. Lift the valve by the eyebolts only.

B. Storage

Pressure relief valves should be stored in a dry environment to protect them from the weather. They should not be removed from the skids or crates until immediately prior to installation.

Flange protectors and sealing plugs should not be removed until the valve is ready to be installed on the system. This includes both inlet and outlet protectors.

C. Pre-installation and Installation

After the valve is uncrated and protective devices removed, exercise care to prevent dirt and other foreign matter from entering either the inlet or the outlet port.

Mounting Instructions

Pressure relief valves should be mounted in a vertical, upright position. Installing a valve in any other position will adversely affect its operation in varying degrees as a result of induced misalignment of parts.

No stop valve should be placed between the pressure vessel and its relief valve except as permitted by Code regulations. If a stop valve is located between the pressure vessel and pressure relief valve, its port area should equal or exceed the nominal internal area of the piping to the relief valve inlet. Pressure drop in the piping from the vessel to the relief valve must not exceed 3% of the valve set pressure when it is flowing at full capacity.

Flanges and gasket surfaces must be free from dirt and debris when valves are installed. Flange bolts should be tightened evenly to prevent distortion of the valve body and inlet nozzle. Before start-up, be sure all threaded joints are tight and secure.

III. Hydrostatic Testing, Service and Remote Sensing

A. Hydrostatic Testing

Prior to hydrostatic test of the pressure vessel system, the pilot-operated safety relief valve should be removed and the mounting flange for the valve blocked.

B. Service Considerations

For best performance, pressure relief valves should be serviced annually unless maintenance history dictates otherwise. They should be located for easy access and removal for service.

C. Remote Sensing

If the pressure drop between the source of pressure in the equipment to be protected and the pressure at the relief valve inlet exceeds 3%, the sensing line to the pilot valve should be connected directly to the equipment being protected rather than to the sensing connection on the main valve inlet neck. The main valve sensing port, (see Fig. 2), should be plugged with an appropriate sized NPT pipe plug.

For remote sensing, 3/8 -inch diameter tubing is adequate for distances up to 10 feet (3.048 m).

For block valve and other special installation features consult API 520 or the factory.

IV. Introduction

A. General

"A pilot operated pressure relief valve is a pressure relief valve in which the major relieving device is combined with and is controlled by a self-actuated auxiliary pressure relief valve."*

The CONSOLIDATED® Modular Pilot Valve (MPV) is designed to provide reliable performance characteristics and stable operation within a pressure range of 15 to 3750 psig.

**Source: ASME Code, Section VIII - Div. I, Paragraph UG-126.*

B. Pilot Valve Introduction

Standard pilot construction consists of 316SS parts with nitrile O-Rings and nitrile diaphragms (only 01 and 07 classes) with Teflon based seals throughout. Alternate materials can be provided by contacting the factory.

Pilot Valve Features

- One pilot fits all 4900-1main valves
- Standard O-Ring seals
- Superior seat tightness
- Accurate adjustment of blowdown and set point
- Positive closure after blowdown
- Reduces icing and clogging
- Dual pilots
- Dual filters
- Field test connection
- Remote sensing
- Optional sensing line filter
- Backflow preventer
- Manual blowdown
- Pressure differential switch
- External blowdown adjustments
- Adjustable Blowdown

Service and Applications

Service	O-Ring Material	310 Code	Temperature Range	Pressure Range
LS*/GS**	Nitrile (Buna-N)	18	-40˚F to +250˚F	15 to 3750
LS/GS	Fluorocarbon (Viton)	22	-15˚F to +400˚F	15 to 3750
LS/GS	Ethylene Propylene	19	-40˚F to +400˚F	15 to 3750
LS/GS	Kalrez	(Note1)	-40˚F to +400˚F	15 to 7000
LS/GS	Teflon	06	212˚F to 505˚F	50 to 7000
SS	Ethylene Propylene	02	212˚F to 500˚F	15 to 49˚F
SS	Teflon	06	212˚F to 505˚F	50 to 750
LS/GS	Nitrile (Buna-N)	08	-40˚F to +250˚F	3751 to7000
LS/GS	Fluorocarbon (Viton)	05	-15˚F to +400˚F	3751 to 7000
LS/GS	EPR	02	-40˚F to +400˚F	3751 to 7000

Note 1: Consult with applications engineer before selecting.
Note 2: Other materials can be used if availability is verified. See applications engineer for special requirements before quoting.
** Liquid Service ** Gas Service*

Main Valve pressure and temperature limitations are combined in pressure class categories according to ANSI Standards. Conversely, the pressure and temperature limits of the Pilot Valve are presented separately.

When replacing or repairing the Main Valve and Pilot Valve assembly, pay particular attention to the pressure and temperature limitations for both the Main Valve and the Pilot Valve to insure compatibility.

49PV07-1-LS 49PV07-1-GS 49MV07-1-LS 49PV07-1-GS	15 psig to 750 psig
49PV37-1-LS 49PV37-1-GS 49MV37-1-LS 49MV37-1-GS	751 psig to 3750 psig
49PV72-1-LS 49PV72-1-GS 49MV72-1-LS 49MV72-1-GS	3751 psig to 5500 psig

Pressure Limitations and Guidelines for Gas and Liquid Service

All versions of 49MPV Pilot are usable between -55°F to 505°F (ambient or internal). However, the O-Ring material may limit temperature range.

Pressure Limitations and Guidelines for Steam Service

The temperature range for steam service is 212°F to 505°F. The pressure range for steam service is 15 to 750 psig. For steam service at pressures between 15 and 49 psig, the 49PV07-1-SS and 49MV07-1-SS require EPR (E962-90) ORings. For pressures between 50 and 750 psig, the 49PV07-1-SS and 49MV07-1-SS uses Teflon O-Rings.

C. Main Valve Introduction

The CONSOLIDATED® Pilot Operated Safety Relief Valve (POSRV) cast bodies are designed to meet the often specified inlet and outlet connection combinations. Sizes range from 1" - 10"; pressure ratings from 150 - 1500 class. The main valve O-Ring dual seating principle is the same design that has been successfully utilized in the CONSOLIDATED® SRV for over 30 years.

Capacities are certified by National Board of Boiler and Pressure Vessel Inspectors and published in their NB18 entitled "Pressure Relief Device Certifications".

Main Valve Features

- Orifice controlled capacity
- Nozzle guided disc
- Superior tightness
- Removable nozzles for replacement or remachining
- Standard O-Ring sizes: readily available, easily replaced
- Meets ASME Section VIII, Div. 1
- Multiple orifices per valve size
- National Board certified capacities

(cont'd. on page 12)

Nomenclature for the 49 PV Pilot

(pop action, non-flowing, and for set pressures from 15 psig to 3750 psig)

Please Provide Artwork

High Pressure

Please Provide Artwork

Medium Pressure

Ref. No.	Nomenclature
1	Main Base
2	Adjuster Cap
3	Compression Screw Cap
4	Diaphragm
5	Yoke
6	Center Plate
7	Spring Washer
8	Spring
9	Compression Screw
10	Compression Screw Lock Nut
11	Adjuster Top
12	Adjuster Bottom
13	Insert Top
14	Insert Bottom
15	Main Piston
16	Lock Nut
17	Cap Screw
22	Field Test Connector
23	O-Ring (Adjuster Bottom)
24	O-Ring (Adjuster Top)
25	O-Ring (Insert)
26	O-Ring (Main Piston)
27	O-Ring (Main Base)
28	O-Ring (Yoke)
29	Spring Seal (Adjustor Top)
30	Spring Seal (Insert)
31	Spring Seal (Yoke)
32	Pipe Plug (Pilot Valve)
43	Vent Assembly

Please Provide Artwork

Figure 1 - 49PV

Nomenclature for the 49 MV Pilot

(modulating, non-flowing, and for set pressures from 15 psig to 3750 psig)

Please Provide Artwork

High Pressure

Please Provide Artwork

Medium Pressure

Ref. No.	Nomenclature
1	Main Base
2	Adjuster Cap
3	Compression Screw Cap
4	Diaphragm
5	Yoke
6	Center Plate
7	Spring Washer
8	Spring
9	Compression Screw
10	Compression Screw Lock Nut
11	Adjuster Top
12	Adjuster Bottom
13	Insert Top
14	Insert Bottom
15	Main Piston
16	Lock Nut
17	Cap Screw (Yoke)
22	Field Test Connector
23	O-Ring (Adjuster Bottom)
24	O-Ring (Adjuster Top)
25	O-Ring (Insert)
26	O-Ring (Main Piston)
27	O-Ring (Main Base)
28	O-Ring (Yoke)
29	O-Ring (Modulator Base)
30	O-Ring (Modulator Stop)
31	O-Ring (Modulator Seat)
32	O-Ring (Modulator Piston Bottom)
33	Spring Seal (Adjustor Top)
34	Spring Seal (Insert)
35	Spring Seal (Yoke)
36	Spring Seal (Piston Bottom)
37	Spring Seal (Piston Top)
38	Modulator Base
39	Modulator Stop
40	Modulator Piston Top
41	Modulator Piston Bottom
42	O-Ring Retainer
43	Lock Screw
45	Cap Screw (Modulator)

Please Provide Artwork

Figure 2 - 49MV

Nomenclature for the 4900 Main Valve

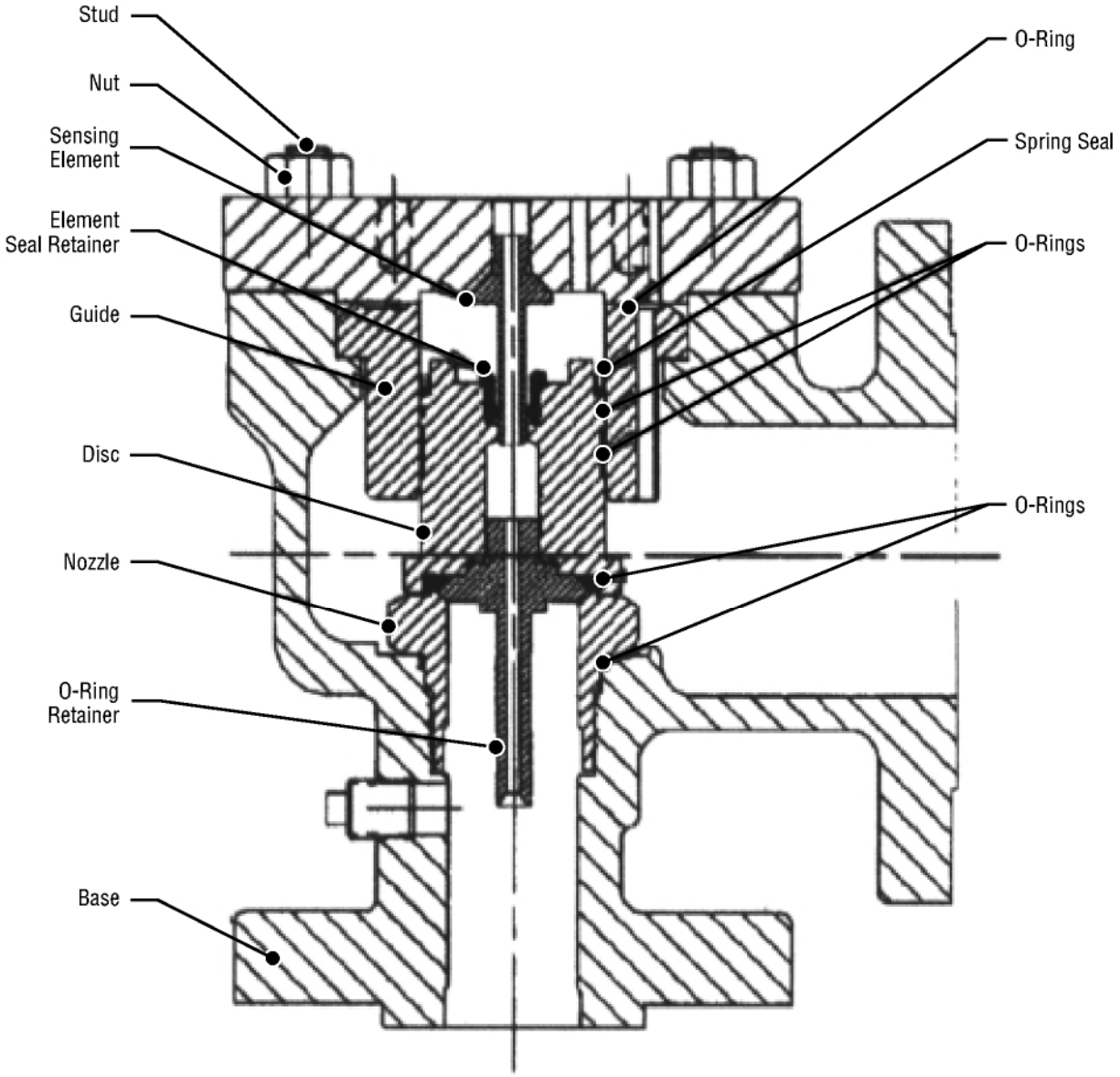

Figure 3
4900 Main Valve

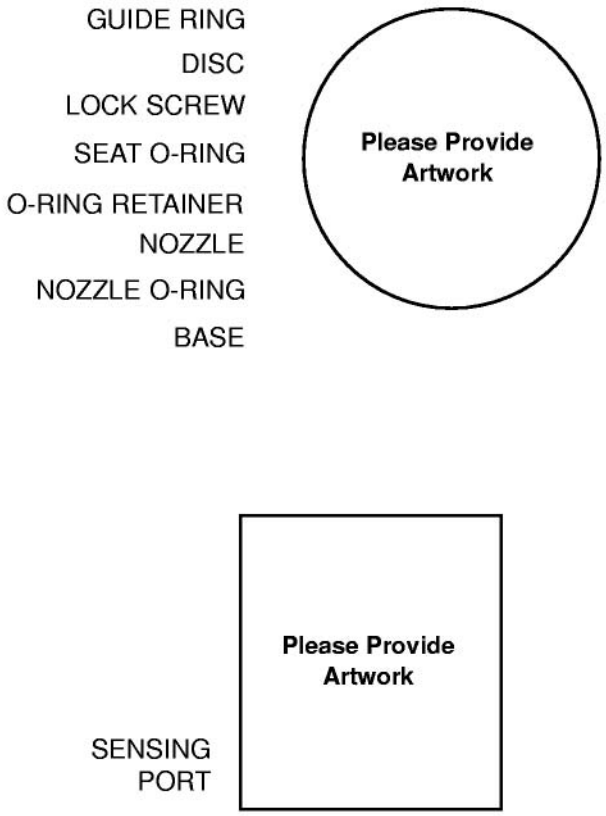

Figure 4
Main Valve Seating Design

The O-Ring retainer has two machined slots in the upper beveled edge, allowing system pressure to reach the chamber behind the O-Ring. This exerts pressure against a specially curved metal seating surface on valve nozzle. The O-Ring seat seal design maintains a greater degree of tightness because the increasing operating pressure works to force the O-Ring against the metal seat.

When the valve opens, there is no pressure build-up in the O-Ring chamber as the slots vent the pressure to a lower pressure area.

This design features a secondary metal-to-metal seat which becomes effective if O-Ring integrity is lost. The beveled seat and disc guide the O-Ring into position, eliminating rubbing and abrasion.

V. Operating Principles

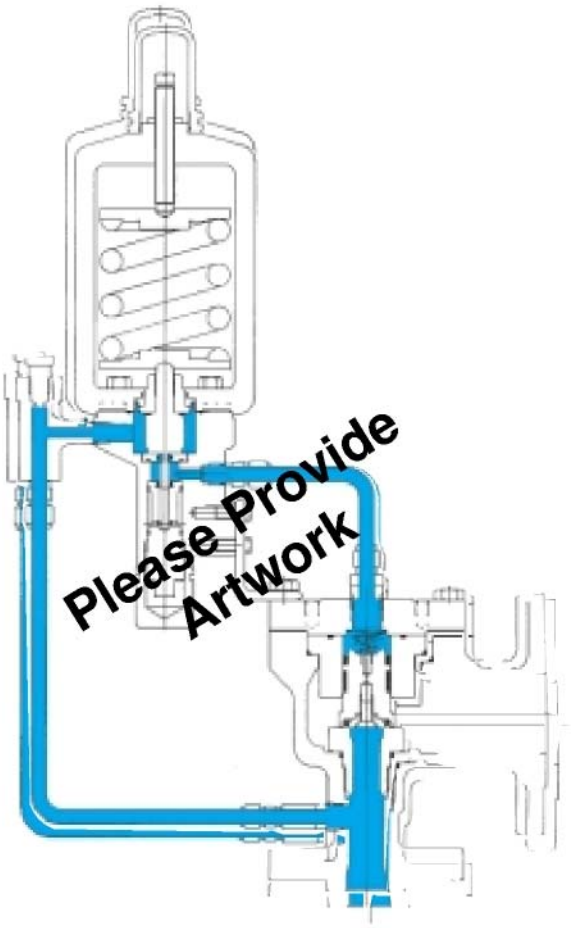

Figure 5
PV Valve Closed (Normal Position)

A. Operational Description for the 4900 Series Type 49 PV Pilot (PV Valve Closed)

System pressure from the main valve inlet is fed to the dome by the pilot through interconnecting tubing. This equalizes the pressure on the top of the disc with inlet pressure on the seating surface (bottom) of the disc. Since the area of the top of the disc is larger than the area of the seating surface, the differential area results in a net downward force, keeping the main valve tightly closed.

Operating Principles (cont'd.)

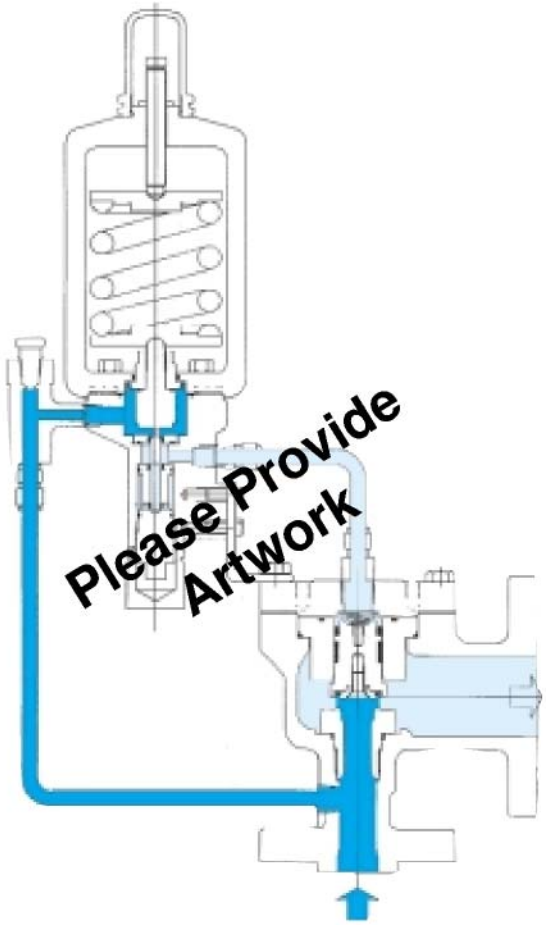

Figure 6
PV Valve Open (Relieving Position)

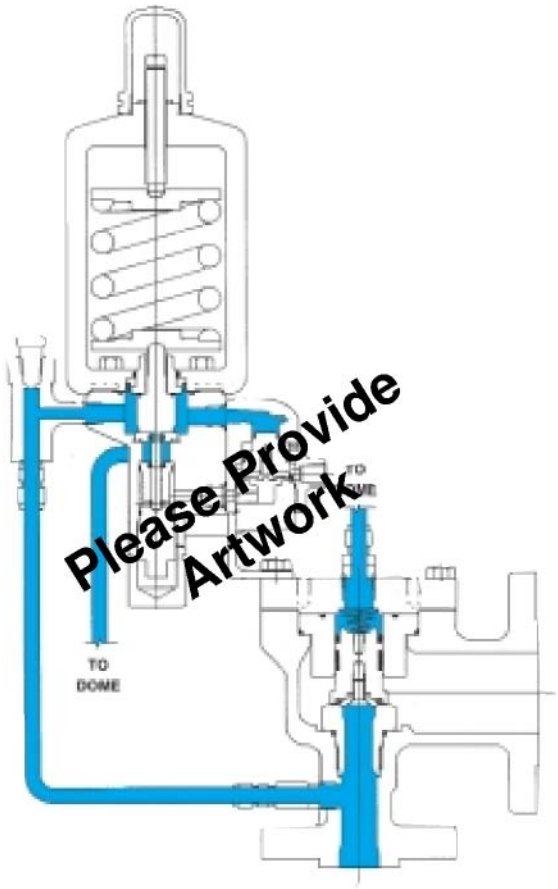

Figure 7
MV Valve Closed (Normal Position)

B. Operational Description for the 4900 Series Type 49 PV Pilot (PV Valve Open)

As inlet pressure increases, the pilot piston strokes and seals off the main valve inlet pressure from the dome pressure. The pilot simultaneously opens the vent seal to relieve the dome pressure to atmospheric pressure. The main valve disc is allowed to lift off the seat as the fluid force overcomes the now removed pressure load above the main valve disc. The valve discharges to relieve system pressure.

When the discharging main valve reduces the inlet pressure to the pre-set blowdown pressure of the pilot, the pilot piston closes the vent seal. Simultaneously, the inlet seal is reopened in the pilot. The main valve inlet pressure is again allowed to enter the dome above the main valve disc. As the dome pressure equalizes with the inlet pressure, the downward force created by the differential areas of the disc closes the main valve.

C. Operational Description for the 4900 Series Type 49 MV Pilot (MV Valve Closed)

System pressure from the main valve inlet is fed to the dome by the pilot through interconnecting tubing. This equalizes the pressure on the top of the disc with inlet pressure on the seating surface (bottom) of the disc. Since the area on the top of the disc is larger than the area of the seating surface, the differential area results in a net downward force keeping the main valve tightly closed.

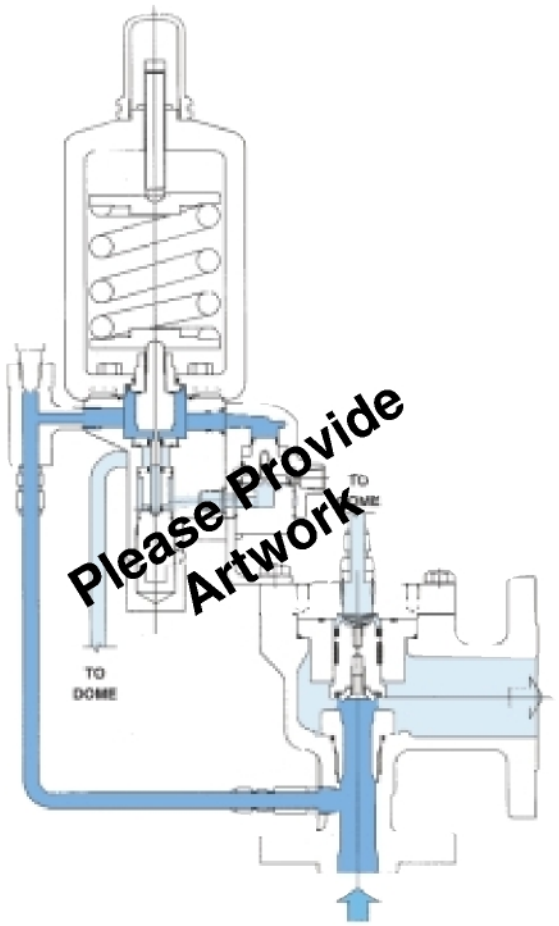

Figure 8
MV Valve Modulating (Partial Relieving Position)
MV Valve Fully Open (Full Relieving Position)

D. Operational Description for the 4900 Series Type 49 MV Pilot (MV Valve Open)

MV Valve Modulating (Partial Relieving Position)
As inlet pressure increases, the pilot piston strokes and seals off the main valve inlet pressure from the dome pressure. The pilot simultaneously opens the vent seal to relieve the dome pressure to the bottom of the modulator piston. The modulator piston has a differential area with the smaller area being on top of the modulator piston. The top of this piston always sees the main valve inlet pressure. When the dome pressure is applied to the bottom of the modulator piston, there is a net upward force. This is due to both pressures being equal (at this point), and the lower area is larger than the upper area. The modulator relieves the pressure from the dome to the atmosphere until force from the inlet pressure on top of the modulator piston is sufficient to move it to the closed position. A certain amount of pressure remains in the dome. This pressure is controlled by the differential area in the modulator. Since the dome pressure has not been dropped to atmospheric pressure, the main valve only partially opens at the set point. The modulator piston will remain closed until the main valve disc is forced into higher lift by increasing inlet pressure. As this occurs, the modulator piston may relieve further pressure from the dome as necessary to achieve the required main disc lift within 10% overpressure.

MV Valve Fully Open (Full Relieving Position)
As the inlet pressure increases further, the net upward force on the main valve disc increases, allowing the main valve to relieve more pressure. The disc obtains full lift (full capacity) within 10% of set pressure.

When the discharging valve reduces the inlet pressure to the pre-set blowdown pressure of the pilot, the pilot piston closes the vent seal. Simultaneously, the inlet seal is reopened in the pilot. The main valve inlet pressure is again allowed to enter the dome above the main valve disc. As the dome pressure equalizes with the inlet pressure, the downward force created by the differential areas of the disc closes the main valve.

VI. General Maintenance

A. Restoring Safety
Appropriate service and repair are important to safe, reliable operation of all valve products. Restoration to original quality and manufacturing specifications will accomplish the desired results. Procedures developed by Dresser as described in the applicable Installation and Maintenance Manual, when correctly applied, will be effective.

B. General Planning
A 12 month maintenance interval is recommended for general service conditions. For severe service applications, a 3 to 6 month inspection and testing interim may be more appropriate. The specific plant's operating and service history will better determine this frequency. Dresser encourages preventive maintenance.

The 4900-3 series Pilot Operated Safety Relief Valve (POSRV) is easily maintained. Normal maintenance usually involves:

- Removal of pilot valve from main valve
- Disassembly
- Cleaning
- Component Inspection
- Parts Replacement as Needed
- Reassembly
- Setting, Testing and Resealing the Valve

Occasionally, remachining the seat bushing may be necessary to extend the service life of the valve. Keep all parts for each valve separated to ensure replacement in the same valve.

C. Removal of Pilot Valve from Main Valve

1. Loosen the cap screws and remove the pilot from the coverplate.

Mark the coverplate and the pilot and base for ease of assembly.

3. Remove the spring shield (refer to Figure 3).

4. Loosen the 4 socket cap screws and remove the pilot from the coverplate.

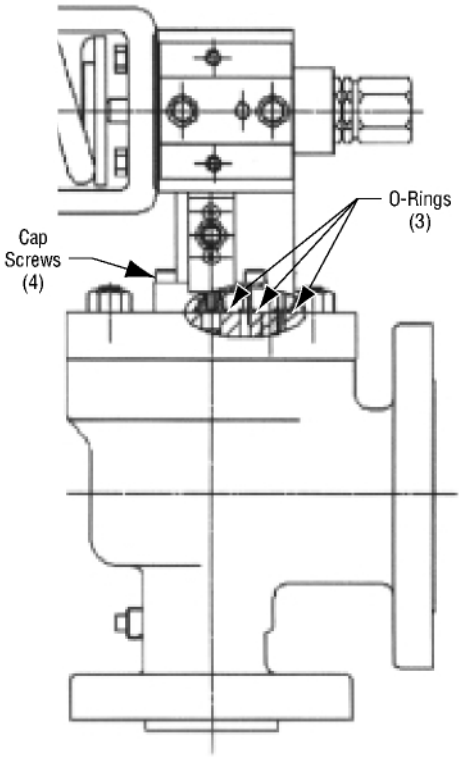

Figure 9

VII. Maintenance of Main Valve

A. Disassembly of Main Valve

(refer to Figure 3 for Main Valve nomenclature)

1. Loosen and remove the cap screws and the cover plate.

2. Remove the disc assembly by lifting up on the disc and using the small threaded hole and an eyebolt of the same size and 2. thread pitch.

3. Remove the guide by lifting straight up out of the base.

4. Remove the sensing retainer nut.

5 For valves with separate retainer and sensing tube, remove the retainer from

5. Remove the inlet spool from the inlet port.

6. Remove the inlet shuttle guide from the inlet port with the flanged end outward.

7. Valve is now ready for cleaning and

7. Remove the inlet shuttle seat from the inlet bore of the pilot. The counterbore should be facing out.

For rework or replacement, remove the nozzle from the base by unscrewing counterclockwise with the appropriate socket or spanner wrench shown in Figure 10 and Table 1. This applies to all main valve sizes except the 8 and 10 inch full bore valves. The latter are disassembled by removing the four restraining bolts, inserting two eyebolts (.625 - 11 unc) 180°apart, and pulling the nozzle out.

C. Cleaning the Main Valve

Parts are to be free of any oil or grease except for lubrication as specified in this instruction.

Cleaning agents used should be such that effective cleaning is assured without injuring the surface finishes or material properties of the part.

Acceptable cleaning agents include demineralized water, non-phosphate detergent, acetone or isopropyl alcohol. Parts must be blown dry or wiped dry after cleaning.

nove the tub

and O-Rings

E

If you are using cleaning solvents, take precautions to protect yourself from potential danger from breathing fumes, chemical burns, or explosion. See the solvent's Material Safety Data Sheet for safe handling recommendations and equipment.

*Maintenance of **M.V.** (cont'd.)*

It is not recommended to "sand blast" internal parts as it can reduce the dimensions of the parts. The base and cover plate may be sand blasted with care not to erode internal surfaces, or damage machined surfaces.

D. Main Valve Inspection and Part Replacement

1. After main valve disassembly, visually examine the condition of the parts.

2. Check for galling or scratch marks on the disc OD and guide ID.

3. Examine the top seating surface of the nozzle for cuts or deformity.

4. Inspect the general condition of base and cover plate for cracks or holes.

5. Check condition of the O-Ring retainer, spring, studs and nuts. Replace as needed.

6. Clean all parts. Inspect guiding and seating surfaces for damage and wear.

E. Main Valve Maintenance Steps

1. Remove and discard all O-Rings, seals and filter elements. Replace with new parts. Replacement O-Rings and seal kits are detailed in Tables 6-9.

2. The nozzle seat can be restored by machining, if required. Critical dimensions that MUST be maintained are shown in Figure 11 and Table 2.

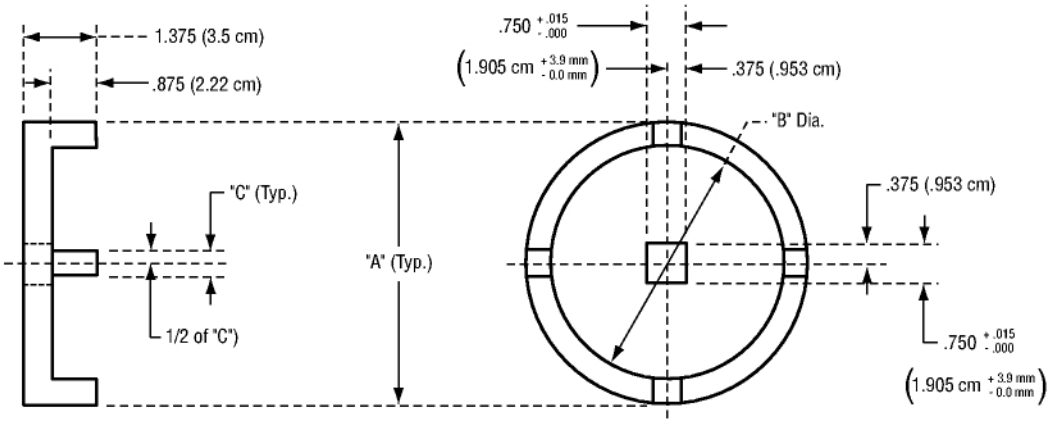

Figure 10
Main Valve Nozzle Wrench Dimensions

Table 1

Valve Size	Tool	A inches A metric	B inches B metric	C inches| C metric
1"	1 5/8" socket wrench	-	-	-
1 1/2", 2"	2 1/4" socket wrench	-	-	-
3"	spanner wrench	3.87 in 98.3 mm	3.250 in 82.6 mm	.500 in 12.7 mm
4"		5.25 in 133.35 mm	4.375 in 111.13 mm	.750 in 19.05 mm
6"		7.50 in 190.5 mm	6.50 in 165.1 mm	1.00 in 25.4 mm
8"		8.50 in 215.9 mm	6.50 in 165.1 mm	1.00 in 25.4 mm
6" x 8" x 8" 8" x 10" x 10" 10" x 10" x 10"	1 1/16" socket wrench	-	-	-

F. Main Valve Lubrication

1. Lightly lubricate all O-Rings with Silicone Grease as provided in the kit.

2. Lubricate and Seal pipe threads with a Teflon thread compound such as Dresser SP-364-AB pipe sealant or Teflon tape.

3. Use nickel based anti-seize compound to lubricate the threads or bearing surfaces on the cover plate stud bolts or capscrews.

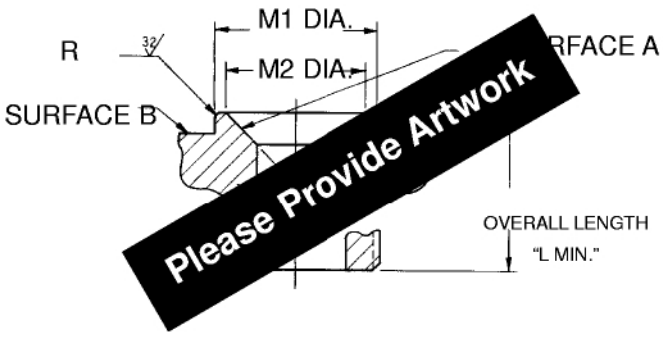

Figure 11
Main Valve Nozzle Rework

Table 2
4900 Nozzle Rework Dimensions (refer to Figure 11)

Size	H ± .005 in ± 1.3 mm	"L Min"	R ± .001 in ± .02 mm	M1	M2
1 in and 1 1/2 in	.090 2.28 mm	1.797 45.64 mm	.022 .56 mm	1.087 (± .001) 27.61 mm (± .02 mm)	1.041 (+.001 / -.002) 26.44 mm (+.02 mm / -.05 mm)
2 in	.089 2.26 mm	1.984 50.39 mm	.022 .56 mm	1.836 (± .002) 46.63 mm (± .05 mm)	1.780 (+.001 / -.002) 45.21 mm (+.02 mm / -.05 mm)
3 in	.105 2.67 mm	2.359 59.92 mm	.022 .56 mm	2.479 (± .002) 62.97 mm (± .05 mm)	2.423 (± .002) 61.54 mm (± .05 mm)
4 in and 3 in F.B.	.105 2.67 mm	2.734 69.44 mm	.022 .56 mm	3.476 (+.002 / -.003) 88.29 mm (+.05 mm / -.08 mm)	3.420 (+.002 / -.003) 86.87 mm (+.05 mm / -.08 mm)
4 in F.B.	.105 2.67 mm	2.734 69.4 mm	.022 .56 mm	4.101 (+.002 / -.003) 104.16 mm (+.05 mm / -.08 mm)	4.045 (+.002 / -.003) 102.74 mm (+.05 mm / -.08 mm)
6 in Single	.125 3.18 mm	2.859 72.62 mm	.022 .56 mm	5.592 (± .003) 142.03 mm (± .08 mm)	5.533 (± .003) 140.54 mm (± .08 mm)
6 in Double	.125 3.18 mm	3.484 88.49 mm	.022 .56 mm	6.484 (+.003 / -.004) 164.69 mm (+.08 mm / -.10 mm)	6.421 (+.003 / -.004) 163.09 mm (+.08 mm / -.10 mm)
8 in Single	.125 3.18 mm	3.484 88.49 mm	.022 .56 mm	6.484 (+.003 / -.004) 164.69 mm (+.08 mm / -.10 mm)	6.420 (+.004 / -.003) 163.07 mm (+.08 mm / -.10 mm)
8 in Double	.125 3.18 mm	2.484 63.09 mm	.022 .56 mm	7.984 (+.003 / -.004) 202.79 mm (+.08 mm / -.10 mm)	7.921 (+.003 / -.004) 201.19 mm (+.08 mm / -.10 mm)
10 in Double	.125 3.18 mm	2.859 72.62 mm	.022 .56 mm	10.234 (+.003 / -.004) 259.94 mm (+.08 mm / -.10 mm)	10.171 (+.003 / -.004) 258.43 mm (+.08 mm / -.10 mm)

All dimensions are in inches unless otherwise specified.

Note 1: Set up nozzle in a lathe and indicate surfaces A and B so that runout is no more then .002" (.05 mm) TIR.
Note 2: Take light cuts across surface A and radius R until seat is restored. Reestablish H dimension.

VIII. Assembly of Main Valve

A. Nozzle Installation

Install nozzle O-Ring into groove in nozzle. Install nozzle into base with the appropriate wrench and torque to the value shown in Table 3, below.

Table 3

Valve Size	Nozzle Installation Torque (ft/lbs) ± 5%
1", 1-1/2"	100
2"	160
3"	475
4"	1070
6"	1445
8"	1865
Bolted Nozzles	60

B. Disc Sub-Assembly

1. Install the seat seat O-Ring in the disc groove and position the O-Ring retainer onto the disc. Install the retainer or retainer screws and tighten to the torque values listed in Table 4a.

2. For valves with separate retainer and sensing tube, assemble the tube to the retainer before attaching to the disc. Insert the tube through the retainer and attach using the hex nut. Torque to 25 ft/lbs ± 5 ft/lbs.

3. Insert an O-Ring into the O-Ring groove of the sensing retainer nut. Thread the nut into the top of the disc, being careful not to dislodge the O-Ring. Torque to 300 in/lbs ± 5 in/lbs.

Note: For Teflon seat O-Rings, heat to 300°F for 10 minutes before installation. Take *care to prevent burns to your fingers.*

C. Disc to Guide Seal

1. For Teflon seals, make sure of the integrity of the Teflon seal and seal springs. Install energized seal on disc outside diameter. It must be installed with the exposed spring facing upwards. Install the cut guide ring(s) on disc outside diameter. Stagger the cut locations on the backup rings 180° apart if two rings are required.

2. For O-Ring seals, install the O-Ring onto the disc, locating it in the groove below the omni seal groove.

Note: For valve sizes shown in the following subsections D and E, "Guide and Disc Assembly", *and for set pressures below 50 psig, remove the spring in the Teflon seal before installing.*

D. Guide and Disc Assembly

(for D, E, F, G, H, J, K and 3" L)

1. Make sure the chamfer on the top of the guide is smooth. If any sharp edges exist, polish the chamfer, since the seal could be damaged during assembly.

2. Insert the disc assembly into the bottom of guide first. Continue pushing disc into guide, being careful of not pinching the guide rings. Push disc in until shoulder of disc hits bottom of guide.

3. Insert guide/disc assembly into top of base. Push disc in until the disc is in contact with the seat.

4. Drop O-Ring into top of base and guide. 5.

Install O-Ring into top groove on guide.
6. Thread the sensing element into the bottom of the cover plate. Torque to 50 ft/lbs ± 5 ft/lbs.

Table 4a

Inlet Size	Orifice	# of Bolts	Thread Size	Torque (in-l.f.)
1" and 1 1/2"	D, E, F	n/a	5/8 - 18UNC	720 ± 5
1 1/2"	G, H	n/a	5/8 - 18UNC	720 ± 5
2"	G, H, J	n/a	5/8 - 18UNC	720 ± 5
3"	J, K, L	4	5/16 - 18UNC	120 ± 5
4"	L, M, N, P	6	3/8 - 24UNC	245 ± 5
6"	Q, R	6	3/8 - 24UNC	245 ± 5
8"	T	6	3/8 - 24UNC	245 ± 5
4"	3" F.B.	6	3/8 - 24UNC	245 ± 5
4"	4" F.B.	4	3/8 - 24UNC	245 ± 5
6"	6" F.B.	6	3/8 - 24UNC	245 ± 5
8"	8" F.B.	8	3/8 - 24UNC	245 ± 5
10"	10" F.B.	8	3/8 - 24UNC	245 ± 5

7. Install cover plate such that the vent port and dome port is on the outlet side of the valve center line. Carefully lower the cover plate onto the base, making sure that the sensing element aligns with the retainer nut of the disc. Install cover plate bolting and torque uniformly, making sure that there is a uniform gap between the base and the cover plate. Torque stud nuts or cap screws to the values shown in Table 4.

E. Guide and Disc Assembly

(for 4"L, M, N, P, Q, R, T, 3"F.B., 4"F.B., 6"F.B., 8"F.B. **and** 10"F.B.)

1. Make sure the chamfer on the top of the guide is smooth. If any sharp edges exist, polish the chamfer, since the seal could be damaged during assembly.

2. Insert guide into top of base.

3. Drop O-Ring into top of base and guide.

4. Insert disc assembly into guide with the O-Ring retainer going in first. Continue pushing disc into guide, being careful not to pinch the guide rings. Push disc in until it is in contact with the seat.

5. Install O-Ring into top groove on guide.

6. Install cover plate such that the vent port and dome port is on the outlet side of the valve center line. Carefully lower the cover plate onto the base, making sure that the sensing element aligns with the retainer nut of the disc. Install coverplate bolting and torque uniformly, making sure that there is a uniform gap between the base and the coverplate. Torque stud nuts or cap screws to the values shown in Table 4.

Table 4b

Bolt/Stud Diameter	Threads per inch	Torque (ft/lbs) ± 10%
3/8"	16	24
7/16"	14	40
1/2"	13	60
9/16"	12	90
5/8"	11	120
3/4"	10	220
7/8"	9	340

IX. Maintenance of Pilot Valve

A. Disassembly of Pilot Valve

Tools Required

- vise
- 3/4" open end wrench
- 1/2" open end wrench
- tool #4995401
- 1/4" Allen wrench
- 1-1/2" adjustable wrench
- torque wrench (ft/lbs)

Specific Steps

1. Remove the compression screw cap by turning counterclockwise.

2. Loosen the two cap screws and remove the modulator attachment if present.

3. Remove the end of the filter and remove the internal filter element spring body and O-Rings.

4. Loosen the two cap screws and remove the port adaptor from the pilot base. Mark the pilot valve base and the adaptor for reassembly.

5. Remove the field test assembly, using care not to drop the balls from the ball checks.

6. Remove the backflow preventer, using care not to drop the ball from the filter.

7. Loosen the compression screw lock nut.

8. Loosen and remove the compression screw and lock nut.

9. If the pilot has a bonnet, remove it by unscrewing it counterclockwise.

10. Remove the spring and spring washers from the yoke assembly.

11. Loosen and remove the four cap screws from the yoke (or bonnet base).

12. Remove the main piston from the base.

13. Using a T-handle groove wrench (part #4995401), remove insert top counterclockwise. Remove the insert bottom, seal and O-Ring.

14. Remove the adjuster plug by turning it counterclockwise and then pulling it gently from the pilot valve base.

15. Holding the large part of the adjuster plug, remove the adjuster top by turning counterclockwise.

(continued)

16. Remove all seal and O-Rings carefully as not to damage the grooves.

17. The pilot valve is now ready to clean and reassemble (see reassembly procedure).

B. Disassembly of the Modulator Assembly 1.

Remove the seal and seal wire.
2. Remove socket head cap screws holding the modulator to the main pilot.

3. Remove and discard the 2 O-Rings between the modulator and the main pilot.

4. Remove both cap screws from the bottom of modulator.
5. Remove modulator stop from modulator base. This can be done by rotating the modulator stop enough to be able to push against the ears on the modulator base to remove the modulator stop.

6. Remove both O-Rings from modulator stop and discard.
7. Remove modulator piston from the modulator base by hitting the base on a firm surface. Make sure surface is clean so that when the piston comes out, the seat does not hit any object that might damage it.

8. Disassemble the modulator piston by removing the lock screw.

9. Remove and discard both O-Rings. Be careful not to bend the lip enclosing medium modulator O-Ring (seat) during removal of the O-Ring.

10. Discard both Teflon seals.

C. Cleaning the Pilot Valve

Parts are to be free of any oil or grease except for lubrication as specified in this instruction.

Cleaning agents used shall be such that effective cleaning is assured without injuring the surface finishes or material properties of the part.

Acceptable cleaning agents include demineralized water, non phosphate detergent, acetone and isopropyl alcohol. Parts must be blown dry or wiped dry after cleaning.

If you are using cleaning solvents, take precautions to protect yourself from potential danger from breathing fumes, chemical burns, or explosion. See the solvent's *Material Safety Data Sheet* for safe handling recommendations and equipment.

It is not recommended to "sand blast" internal parts as it can reduce the dimensions of the parts. The base and cover plate may be sand blasted with care not to erode internal surfaces, or damage machined surfaces.

D. Inspection and Part Replacement

After the valve has been disassembled, all parts should be given a visual inspection. Some key areas to check with the boundaries for reworking parts are listed below.

1. Main Piston - Galling or excessive wear on the small diameter end where it engages the seals or on the spherical bearing surface. Any corrosion or pitting. The part can be polished as long as the outside diameter of the stem remains at 0.243 ± .001 inches. The stem itself must have a TIR of 0.001 inches along its length.

2. Insert Top - Galling or excessive wear on the inside diameter that guides the Main Piston. Check for any corrosion or pitting. Also, check for galling of threads.

3. Insert Bottom - Galling or excessive wear on the inside diameter that guides the Main Piston. Check for any corrosion or pitting.

4. Adjuster Top - Galling or excessive wear on the inside diameter that guides the Main Piston. Check for any corrosion or pitting. Also, check for galling of threads.

5. Adjuster Bottom - Galling or excessive wear on the inside diameter that guides the Main Piston. Check for any corrosion or pitting. Also check for galling of threads.

6. Center Plate - Galling or excessive wear on the outside diameter that rubs against the yoke. Check for any corrosion or pitting.

7. Yoke - Galling or excessive wear on the inside diameter that guides the Main Piston Assembly. Any corrosion or pitting. Check for any galling on the threads for the compression screw.

8. Compression Screw - Galling at the spherical bearing surface or in the thread. Check for any corrosion or pitting.

9. Spring Washers - Galling at the spherical bearing surface. Check for any corrosion or pitting.

10. Shuttle Base - Galling or excessive wear in the threads.

11. Shuttle Plug - Galling or excessive wear in the threads.
12. Modulator Stop - Top seating surface for cuts or deformities. The surface can be lapped if the distance from the seat to the outside shoulder does not reduce to less than 0.086 inches.

Con

13. O-Ring Retainer - Seating surface for cuts or deformities. The surface can be lapped if the overall height of the part does not reduce to less than 0.160 inches. Also, check the outside diameter for any scratches that might prevent the O-Ring from sealing.

14. Modulator Piston Bottom - Galling or excessive wear on the outside diameter that rubs against the modulator base. Make sure that the lip holding the ORing for the seat is not deformed. Also, check the outside diameter of the O-Ring groove for scratches that might cause the O-Ring not to seal. Check for any corrosion or pitting.

15. Modulator Piston Top - Galling or excessive wear on the outside diameter that rubs against the modulator base. Check for any corrosion or pitting.

16. Modulator Base - Galling or excessive wear on any inside diameter. Any corrosion or pitting.

If any damage listed above is present, the part should be replaced or repaired per instruction. Other valve parts may be acceptable with light corrosion, pitting, or minor damage of other types if it can be determined that it will not affect product performance. All O-Rings, diaphragms, and seals should be replaced each time the valve is disassembled.

Refer to Tables 6-9 for a list of O-Ring repair kits. Recommended spare parts are listed in Table 5.

E. Pilot Valve Lubrication

1. Lightly lubricate all O-Rings except Silicone O-Rings, with Silicone Grease as provided in the kit.

2. Lubricate and seal pipe threads with a Teflon thread compound such as Dresser SP-364-AB pipe sealant or Teflon tape.

3. Lubricate standard threads and bearing points with fluorolube (GR362) or equivalent.

X. Assembly of Main Pilot

1. Make the adjuster assembly
   This assembly consists Of.. 1
   - Adjuster *bottom 1 - Adjuster*
   top 1 - Teflon seat seal

   Specific Steps:
   a. Install first small main O-Ring into groove on adjuster top.
   b. Install second small main O-Ring into groove on adjuster bottom. Install from the opposite end of the square.

37

c. On the same end of the adjuster bottom, place the Teflon seat seal on top of the adjuster bottom with the spring facing upwards.

d. Thread adjuster top onto adjuster bottom and tighten hand tight.

Note: Before wrench tightening adjuster top, unscrew the pieces and inspect seal in adjuster top. Make sure the outer lip on seat seal did not flare out during installation. If it did, check seal guiding chamfer for nicks or burrs and replace the seal. *Repeat above procedure until seal* installs *properly. Torque to 27 ft/lbs ± 2 ft - lbs.*

Do not install adjuster assembly into main base with O-Rings installed without wrench tightening adjuster top and adjuster bottom together. Adjuster top can get stuck in base.

e. Cycle main piston through Teflon seat seal 10 times.

f. Lightly lubricate both O-Rings. Install assembly into base with the adjuster top going in first. Rotate the assembly at the same time as it is being inserted until the threads are engaged. This helps the O-Rings get by the chamfers and holes.

g. Continue to thread adjuster assembly into base until it stops. Do not tighten.

h. Thread the adjuster lock nut onto the adjuster assembly hand tight.

i. Thread adjuster cap onto adjuster assembly. Hand tighten.
Note: Make sure cap threads freely on adjuster bottom. .

Make the insert assembly.

This assembly consists of: 1
- Insert top 1 - Insert bottom 1
- Teflon seat seal 1 - Small
main O-Ring

Specific Steps:

a. Press Teflon seat seal into groove on the insert bottom. Make sure spring is facing upwards.

b. Install insert top over insert bottom with the seal side going in first.

c. Lightly lubricate O-Ring groove now formed by the two insert parts. This lubrication is used to hold the ORing in place when it is being inserted into base.

d. Place small main O-Ring into groove.
e. As shown in Figure 6, turn insert assembly over and thread into base with T-handle groove wrench (part #4995401.) Tighten wrench tight. Make sure milled slot is facing up. *(continued)*

Con

Assembly of Main Pilot (cont'd.)

f. Cycle main piston through Teflon seat seal 10 times. 3.

Place large O-Ring in groove on top of base. 4. Install the

Teflon seal into the yoke or top plate.

For Low pressure: 49PV07-T

Install the low pressure Teflon seal into the low pressure yoke or top plate. The spring should be facing you when installed.

Next, install the low pressure main piston into the low pressure yoke or top plate with the spring washer bearing point going in first. Be careful not to damage the Teflon seal.

For High Pressure: the 49PV37-T

Install the high pressure Teflon seal into the high pressure yoke or top plate. The spring should be facing you when installed.

Next, install the high pressure main piston into the t pressure yoke or top plate with the spring washer bearing point going in first. Be careful not to damage the Teflon seal.

5. Install the main piston and yoke or top plate assembly into the base by inserting small diameter end of piston through insert assembly. Line up the yoke arms with the dome port and the inlet port.

6. Insert the four cap screws through the yoke or top plate and thread into the main base. Tighten to 300 in-L.B.F. (± 30 in-L.B.F.).

7. Thread lock nut onto compression screw.

8. Thread compression screw into top of yoke or bonnet until the bearing point begins to protrude through the yoke or bonnet.

9. Place spring washers on the ends of the spring. There is not a top or bottom to the top or bottom spring washer.

10. Place spring and spring washer assembly on top of main piston for valves with yokes. Hold this assembly in place while turning compression screw down to the top spring washer. For valves with bonnets, install the bonnet over the spring and washer assembly. Thread the bonnet onto the top plate. Tighten wrench tight. Install and tighten lock screws.

11. Tighten compression screw lock nut wrench tight.

XI. Assembly of Field Test Fitting

1. Insert the field test filter or guide into the field test fitting openings of the body.

2. Insert a ball seat O-Ring into the field test fitting seat ring counterbore.

3. Insert the field test O-Ring seal into the pilot base.

4. Position the pilot base with the field test fitting opening vertical. Insert the ball check ball into the filter or guide.

5. Thread the field test fitting body into the pilot base. Torque the fitting to 50 ft/lbs.

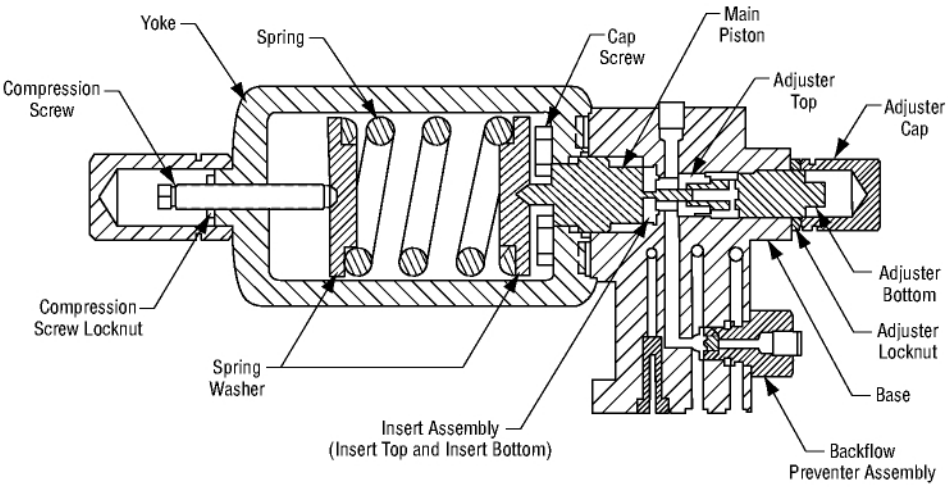

Figure 12
Pop Action 49PV37

XII. Assembly of Gas or Liquid Modulator

1. Make the modulator piston assembly.

This assembly consists Of..
1 - Modulator piston top
1 - Modulator piston bottom 1 - O-Ring retainer 1 - Lock screw
1 - Small modulator 0-ring 1 - Teflon inlet seal 1 - Teflon balance seal
1 - Medium modulator O-Ring

Specific Steps:

a. Install Teflon inlet seal into groove on modulator piston top. Be sure to have the spring in the seal facing up.

Note: Make sure that the proper service is stamped on the top of the modulator piston top.

b. Install medium modulator O-Ring into groove on modulator piston bottom.

c. Turn modulator piston bottom over and place small modulator O-Ring into inner groove.

d. Install Teflon balance seal onto modulator piston bottom in outer groove. Make sure spring is facing down.

e. Insert modulator piston top into modulator piston bottom through the side with the small modulator ORing and the Teflon balance seal.

f. Turn assembly over and install O-Ring retainer. The chamfered outside diameter goes in first.

g. Thread lock screw through O-Ring retainer into modulator piston top. Tighten 40 in/lbs ± 5 in/lbs.

2. Lubricate Teflon seals before inserting into modulator base.

Note: Make sure that the proper service is stamped on the top of the modulator base *and it matches what is stamped on modulator piston top.*

3. Insert modulator piston assembly into modulator base with the modulator piston top going in first. Push piston in with thumbs until it stops. There will be some resistance due to the Teflon seals compressing to fit into the bore of the modulator base. If necessary for installation, insert the proper wrench into the lock screw. Lightly tapping the wrench with a hammer will force the piston into the modulator base.

4. Install both large modulator O-Rings into grooves on modulator piston stop.

5. Insert modulator stop into modulator base with the seat going in first. Make sure the side hole in the modulator stop is facing towards the flat side of the modulator base.

6. Thread the cap screws through the modulator stop into the pilot modulator. Tighten to 365 in/lbs ± 30 in/lbs.

7. Install the modulator.

a. Remove pipe plug on flat modulator surface of main base. Check to verify that no Teflon tape has been left in vent port or the port above it.

b. Place two small modulator O-Rings into grooves on flat surface of main pilot.

c. Attach modulator to main base with two hollow head cap screws with 95 in/lbs ± 10 in/lbs of torque.

XIII. Reassembly of Pilot to the Main Valve

A. Installation of the Pilot

1. For the 49PV07-T and the 49MV07-T:

a. Insert O-Rings in the inlet sensing port, dome port and vent port ring grooves of the pilot base.

b. Insert the inlet shuttle seat into the inlet bore of the pilot. The counterbore should be facing out.

c. Inset the inlet shuttle guide into the inlet port with the flanged end outward.

d. Align the inlet port, dome port and vent port in the main valve coverplate. Care must be taken to insure that the shuttle guide and O-Rings stay in place.

e. Bolt the pilot to the coverplate using the 4 socket head cap screws specified on the bill of material. Torque to 40 ft/lbs ± 5 ft/lbs.

2. For the 49PV07-1, 49PV37-1, 49MV07-1 and 49MV37-1:

a. Insert O-Rings in the inlet sensing port, dome port and vent port ring grooves of the pilot base.

b. Place an O-Ring in the O-Ring shoulder of the small end of the inlet spool.

c. Insert the inlet spool into the inlet port with the flanged end outward.

d. Align the inlet port, dome port and vent port of the pilot with the matching ports in the main valve coverplate. Care must be taken to insure that the shuttle guide and O-Rings stay in place.

e. Bolt the pilot to the coverplate using the 4 socket head cap screws specified on the bill of material. Torque to 40 ft/lbs ± 5 ft/lbs.

Reassembly, Pilot to Main Valve (cont'd.)

B. Assembly of the Backflow Preventer (refer to Figure 1)

1. Insert a ball seat O-Ring into the pilot base seat ring counter bore at the bottom of the backflow preventer fitting opening.

2. Insert the backflow preventer ball check guide into the pilot base. The end closest to the cross-drilled holes must go in first.

3. Insert a ball seat O-Ring into the backflow preventer fitting seat ring counterbore.

4. Insert the two backflow fitting O-Ring seals into the pilot base, locating them on the seal shoulders as shown in Figure 1.

5. Position the pilot base with the backflow preventer fitting opening vertical. Insert the ball check ball into the guide.

6. Thread the backflow preventer into the pilot base. Torque the fitting to 50 ft/lbs.

C. Assembly of the External Filter

1. Insert O-Rings into the two .375 diameter x .055 deep counterbores of the external filter port of the pilot base.

2. Insert an O-Ring into the counterbore at the filter base bolt hole.

3. Assemble the filter base to the pilot base using the filter bolt reference on the b/m. The 1/4-18NPT thread in the filter base must be facing toward the pilot base inlet flange face. Torque the bolt to 35 ft/lbs ± 5 ft/lbs.

4. Screw the filter tie bolt into the filter base. The end with the drilled and cross-drilled hole goes in the filter base. Screw it all the way in until it contacts the filter bolt, then back off 1/4 turn.

5. Install the filter element over the tie bolt and onto the raised filter element guide of the filter base.

6. Install a filter sleeve O-Ring seal over the filter sleeve guide shoulder of the filter base.

7. Install the filter sleeve to the filter base.

8. Install a filter sleeve O-Ring seal over the filter sleeve guide shoulder of the filter end cap.

9. Thread the filter end cap onto the filter tie bolt. Tighten until metal-to-metal make up with the guide sleeve is obtained.

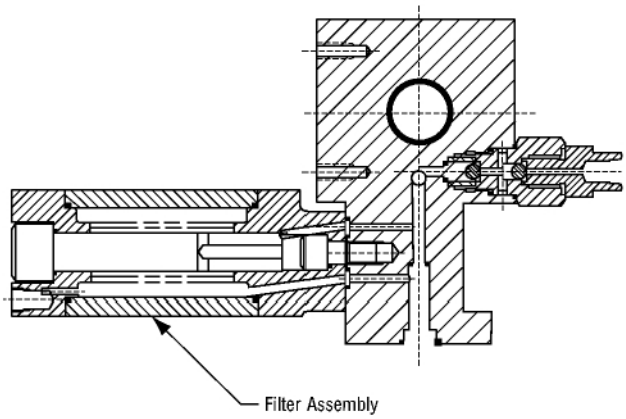

Figure 13
Identification of Filter Assembly

XIV. Pilot Valve Testing

A. General Testing

The pilot valve opening and closing pressure must be calibrated prior to its assembly onto the main valve. Failure to do this can cause incorrect blowdown readings, but if the valve is to be tested on the pressure vessel, it can successfully be calibrated and tested for set pressure *and* blowdown.

The pilot test stand should consist of the equipment listed below (refer to Figure 14 for recommended set up). All equipment must be rated for at least 3750 (264 kg/cm^2) psig pressure.

1. suitable pressure source with regulator
2. 1/2 cubic foot (14 liter) inlet side accumulator 3.

1/30 cubic foot (1 liter) dome simulator 4. inlet and

dome pressure gauges 5. inlet supply throttle valve

6. inlet supply vent/throttle valve

7. inlet supply and dome simulator pressure gauges

The inlet accumulator and dome simulator should be fitted with a drain valve at the lowest point in the vessel to allow draining moisture before testing.

B. Definitions and Guidelines

- Set Point: This is the point where vent pressure is felt from port.
- Closing Point: This is the point where dome pressure begins to reload.
- Blowdown: Set point minus closing point.
- Notch: Any peak or valley on bottom of main pilot which is used for adjustment.

Leakage will be checked for a one-minute interval. Pilots with Teflon O-Rings (for use on steam) may leak on air test.

Con-37

C. Calibration and Testing Procedure

1. Remove adjuster cap and loosen the adjuster plug lock nut. 2.

Proceed with the initial setting of seats.

a. Turn adjuster into base until it stops. Turn out 1 turn.

b. Adjust compression screw to approximately ± 10% of set point of pilot. Final setting will be done later.

3. Troubleshoot.

a. Make adjustments in 2 notches or less. Match any corner of the square on the bottom of the adjuster to a notch on the base.

b. **Only turn adjuster when there is less than 125 psig in dome.** Adjustment is usually done when inlet pressure is at 110% of set pressure.

c. If you experience long blowdown, turn the adjuster out. If the pilot is flowing and the dome is not dropping at 1% or 1 psig overpressure (whichever is greater), turn adjuster in.

4. Adjust blowdown.

a. Lower inlet pressure so that inlet and dome pressures are equal (approximately 90% of set pressure).

b. Slowly increase pressure to note the set point.

c. Increase inlet pressure to 1% or 1 psig above set point (whichever is greater), and hold for a couple of seconds to make sure dome pressure is dropping. If dome pressure is dropping, continue to increase to 10% over pressure or 3 psig (whichever is greater). Dome pressure should drop to 0 psig. If dome pressure is not dropping, adjust as noted in the preceding Step 3, "Troubleshooting".

d. Slowly drop inlet pressure to note the closing point. e.

Use the following guidelines when setting blowdown:

For Gas Service:
Set pressure is 15 to 75 psig - 0 to 1.5 psig

blowdown
Set pressure is 76 to 750 psig - 0% to 2% blowdown
Set pressure is 751 to 3750 psig - 0% to 3% blowdown

For Liquid Service:
Set pressure is 15 to 30 psig - 1 to 3 psig blowdown
Set pressure is 31 to 75 psig - 2 to 4 psig blowdown
Set pressure is 76 to 3750 psig - 3% to 6% blowdown.

f. If blowdown adjustments are necessary, increase inlet pressure to release dome pressure to less than 125 psig. Make adjustments and re-test as outlined in the preceding Step 3, "Troubleshooting".

g. If adjustments are not necessary, continue with Step 5.

5. Adjust compression screw for set pressure without modulator attached.

For 49PV-T: Set at 1% to 2% below set pressure or 1 psig, whichever is greater.

Note: If the 49PV-T *is piped to the* outlet, *increase the set pressure mentioned above according to the following table.*

% Backpressure	Set Pressure Adjustment
0-15	0%
16-45	up 1%
46-75	up 2%
76-100	up 3%

For 49MV-T: Set at 0% to 1% below set pressure or 1 psig, whichever is greater.

For example, if the set pressure equals 150 psig on gas, the following valves would be set at:

49PV07-T = 147.0 psig 49MV07-T = 148.5 psig Closing point = 144.1 psig Closing point = 145.5 psig

Pilot 0 BPM = 144 psig Pilot 0 BPM = 144 psig Pilot < 40 BPM = 165 psig Pilot 0 BPM = 165 psig

6. After adjustments have been made, tighten lock nut on compression screw and tighten adjuster cap to secure settings.

7. Re-Verify Settings.

a. Lower inlet pressure so that inlet and dome pressures are equal (approximately 90% of set pressure).

b. Slowly increase pressure to verify that pilot is tight (0 BPM) at 4% below set point or 2 psig, whichever is greater.

c. Increase inlet pressure to 1% or 1 psig above set point, whichever is greater, and hold for a couple of seconds to make sure dome pressure is dropping. If dome pressure is dropping, continue to increase to 10% over pressure or 3 psig, whichever is greater. Dome pressure should drop to 0 psig. If dome pressure is not dropping, adjust as noted in the preceding Step 3, "Troubleshooting". Retest beginning with Step 7a, above.

d. Check rate of leakage from pilot at 10% above unit ticket set point. It should be less than 40 BPM.

e. Slowly drop inlet pressure to note the closing point. **25**

8. Proceed with the final test of modulator.

Note: For gas service using D-E-F orifices and main valves below 50 psig, grind off liquid on modulator and restamp GAS 2. Do this on the base *and modulator piston top. Test* as a *liquid modulator.*

a. Remove pipe plug on flat modulator surface of main base. Check to verify that no Teflon tape has been left in vent port or the port above it.

b. Place two small modulator O-Rings into grooves on flat surface of main pilot.

c. Attach modulator to main base with two hollow head cap screws with 95 in/lbs ± 10 in/lbs of torque.

d. Repop pilot five times then check for the following:

- Do not readjust compression screw or adjuster.
- Pilot should be tight (0 BPM) up to 4% below set pressure, or 2 psig, whichever is greater.
- Pilot should be tight (0 BPM) at 10% above set pressure, or 3 psig, whichever is greater.
- When set pressure is above or equal to 75 psig, at 10% overpressure or 3 psig (whichever is greater) the dome pressure should drop to the following level:
  Gas - 45% to 60% of Set Pressure
  Liquid - 15% to 35% of Set Pressure
- When set pressure is below 75 psig, at 10% overpressure the dome pressure should drop to the following level:
  Gas - 0% to 60% of Set Pressure.
  Liquid - 0% to 35% of Set Pressure

e. If any of the above checks fail, rebuild the modulator according to Section XII, "Assembly of Gas or Liquid Modulator". Install the rebuilt modulator and retest beginning with Step 8b, above.

f. If pilot is a 49PV-T, continue with 8.0. If pilot is a 49MV-T, continue with 9.0.

D. Final Set Pressure Adjustment

Once the pilot valve set pressure and blowdown are calibrated on the pilot valve test stand and the pilot valve is installed on the main valve, **only the set pressure (opening of the main valve) may be tested and adjusted if necessary on a shop test stand.**

Note: The blowdown cannot be successfully adjusted in the shop when the pilot valve is installed on the main valve. The pilot valve must be set on the pilot valve setting stand.

E. Seat Tightness and Leakage Test

After the set point and blowdown have been set, the valve must be checked for seat tightness.

Pressurize the valve to 96% or within two psig of set pressure, whichever is greater. Use a bubble cup filled with water to check for leakage. Check all fittings and ports for leakage.

F. Testing on Installation

Field testing may be used to verify the valve opening point on repaired valves, or to periodically check the function of valves in service. A test set up similar to that shown in Figure 16 should be used.

The set pressure of the 4900-3 series POSRV is defined as the pressure at which the main valve opens. The following table indicates the allowable set pressure tolerances according to the ASME Boiler and Pressure Vessel Code.

Required Set Point	Tolerance
15-70 psig (1.05-4.92 kg/cm²)	± 2 psig (± 14 kg/cm²)
71 psig and greater (4.99 kg/cm²)	± 3% of set pressure

1. Loosen and remove the tubing connecting the pilot valve and the discharge flange.

2. Close all the valves shown in the field test kit.

3. Connect the isolation valve to the pilot valve through the test port labeled "Test". **Do not remove any other plugs.** 4. Open the valve at the inlet neck of the nitrogen tank.

5. Turn the regulator control knob clockwise gradually until a pressure of 10 psi is indicated on the test gauge attached to the regulator.

6. Open the vent valve to purge the test system. 7.

Close the vent valve.

8. Increase the test pressure by turning the control knob on the regulator clockwise until the pilot valve begins to vent.

9. Note the test gauge reading when the pilot valve vents. The pilot opening pressure should be within tolerances referenced in Section XIII.

Note: The main valve will not open using field *test connection.*

10. After the set pressure is noted, turn the control knob counterclockwise to reduce the pressure in the pilot valve.

11. Confirm the pilot valve opening pressure by repeating the above test twice more for a total of three tests. All test results should be within the proper set pressure tolerance.

Pilot Valve Testing (cont'd.)

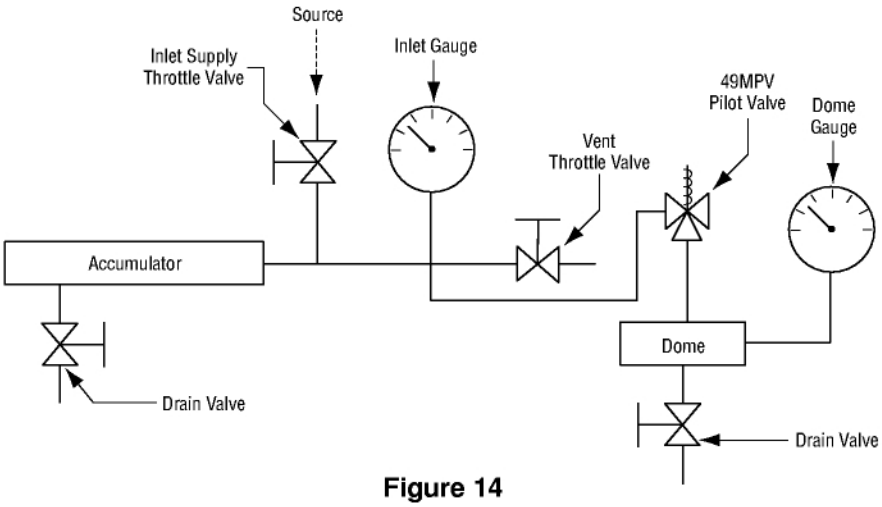

Figure 14
Pilot Valve Calibration Stand

Note 1: Do not attempt to adjust blowdown when testing the pilot/main assembly. The 49PV and 49MV can only be tested for set pressure and tightness when the pilot/main valve assembly is tested together.

Note 2: The in-line accumulator must be at least 1/2 cubic foot (14 liters), in volume.

Note 3: A suitable dome simulator may be made out of a short length of stainless steel tubing, tubing fittings and a suitable pressure gauge. The dome simulator will increase in pressure as the pilot valve inlet increases in pressure. Set pressure is indicated when the dome simulator pressure gauge drops off in pressure. As inlet pressure is decreased in the pilot valve to 5% of the set pressure or 3 psi (.21 kg/cm²) whichever is greater, the dome simulator should show an increase in pressure to match the inlet pressure.

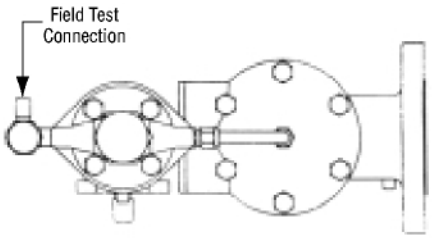

Figure 15
Identification of Field Test Connection

Note: Main valve will open when tested through field test connection but pilot venting will indicate set pressure for the field test only.

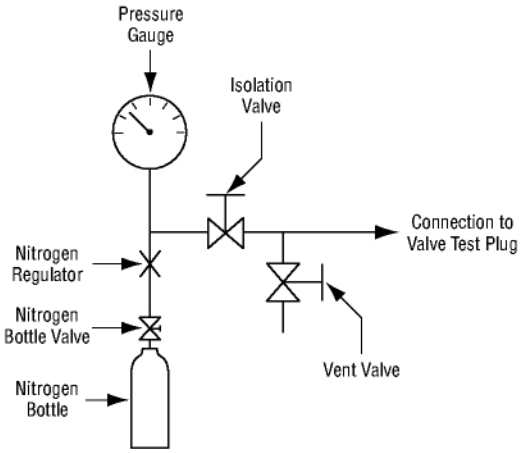

Figure 16
Typical Field Test Arrangement

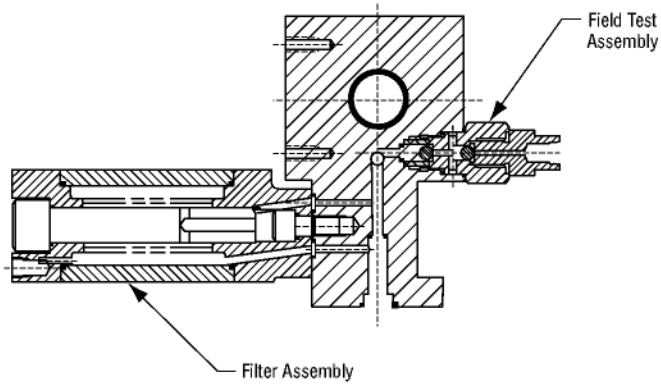

Figure 17
Identification of Field Test Assembly

XV. Backflow Preventer Option

When a pilot operated relief valve is not vented directly to atmosphere, it is possible to build up a back pressure in the discharge line. This is typical in applications where several valves manifold into a common discharge header. Should the discharge line back pressure exceed the valve inlet pressure, it could cause the main valve piston to lift and allow reverse flow through the main valve. This trouble can be avoided by use of the Backflow Preventer optional feature.

1. Disassembly: remove plug (located near the valve discharge flange) from body by unscrewing counterclockwise. Remove ball and filter.

2. Maintenance and Reassembly
   a. Remove and discard O-Rings.

   b. Clean all parts and inspect for damage and wear.

   c. Lubricate O-Rings with silicone grease or equivalent.
   d. Reassemble with new O-Rings (refer to Table 9, ORing kit information for options).

XVI. Troubleshooting the 4900 Series Valve

Problem	Possible Cause	Corrective Action
Pilot valve is not open at set pressure and main valve will not open.	A. Wrong set pressure.	A. Readjust the set pressure of the valve.
Main valve does not close upon start-up and P2 chamber does not load with system pressure	A. Start-up procedures pressurize the valve too rapidly. B. Sensing tube is installed upside-down. C. Filter is closed. D. Spring is not installed.	A. Slowly increase the inlet pressure. B. Re-install the sensing tube correctly. C. Clear or replace. D. Install spring.
Leakage through the pilot valve	A. Operating pressure is too high. B. O-Ring or seal has become degraded.	A. Adjust operating pressure. B. Disassemble and replace O-Ring or seals.
Main valve opens and allows the discharge media to flow back into the pressure vessel	A. Back pressure is greater than set pressure and forces the main disc up, and the media flows backward into the vessel. B. Discharging into a closed container or not enough capacity in the discharge system.	A. Install a backflow preventer. B. Install backflow preventer.
Blowdown Incorrect	A. Incorrect adjuster plug setting.	A. Re-set adjuster plug (see pilot valve setting).
Leakage around fittings	A. Fittings are not tightened or are cross-threaded.	A. Re-install fittings correctly.
Leakage under the cover plate when valve is opened	A. Guide O.D. O-Ring is damaged. B. Cap screws or stud nuts on coverplate are loose.	A. Disassembly valve and replace O-Ring. B. Tighten as required.
Main valve leaks through the seat	A. Damaged seat O-Ring	A. Disassemble valve and replace O-Ring.
Main valve leaks under the nozzle seat	A. Damaged nozzle O-Ring	A. Disassemble main valve and replace damaged O-Ring.

XVII. Replacement Parts Planning

A. Basic Guidelines

The following guidelines should be of assistance in developing a meaningful replacement parts plan.

1. The total number of valves in service should be classified by size, type, and temperature class.

2. The parts inventory should be classified by the tendency to require replacement.

   Class I - Most frequently replaced
   Class II - Less frequently replaced but critical in an emergency

3. Parts for the valve types covered by this manual are classified on Table 5. "Quantity Parts" is the number of parts or sets which is recommended to achieve a desired need-probability, as it relates to the total number of valves in service by size and type. For example, a "Qty. parts" of 1 for "Valves in service" of 5 means that 1 part should be stocked for each 5 valves of the same type and size in service.

4. When ordering replacement parts, please specify in accordance with applicable nomenclature (see Figures 1-3). Be sure to state the size, type and serial number of the valve for which parts are required. When ordering pilot parts please state specific pilot type (49PV01, 07, 37, etc.)

For ease of maintenance O-Ring kits are available for each main valve and pilot type. A stock of these kits should be kept on hand for maximum operating efficiency. See Tables 6-9.

B. Identification and Ordering Essentials

When ordering service parts, please furnish the following information to ensure receiving the correct replacement parts.

Identify valve by the following nameplate data: 1.

Size
2. Type

3. Pressure/Temperature Class Rating

4. Serial Numbers from both main valve and pilot valve

Example:
Main Valve - 4910R-3-CC-DA-RF-GS, TL1234M

Pilot Valve - 49PV07-1-CC-B-GS, TL1234P

C. POSRV Identification

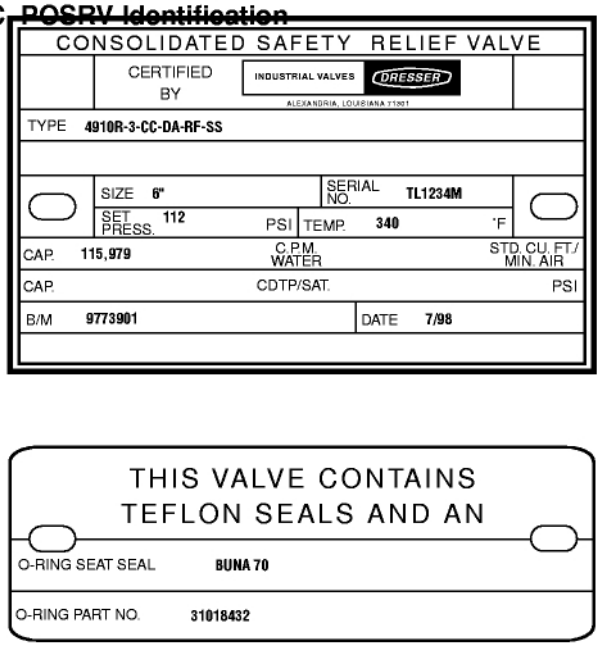

Figure 18
Nameplates for Main Valve

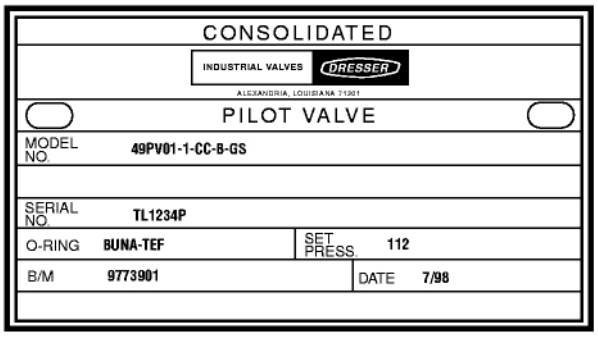

Figure 19
Nameplate for Pilot Valve

D. Verifying Materials of O-Rings and Seals Kit coding indicates O-Ring and seals material.

Examples:

MORK-60T	T=Teflon
	B=Buna N PORKF-34E
	E=Ethylene/Propylene
PORKF-32V	V=Viton
	K=Kalrez

Con-37

Replacement Parts Planning (cont'd.)

E. Positive Identification of Main Valve and Pilot Valve Combinations

POSRV's shipped direct from the factory to the end-user probably have main valves and pilot valves with identical serial numbers (S/N's). Those shipped unconnected to the Dresser Green Tag network may have main valves and pilot valves with different S/N's. During service and repair, the following inspection steps will ensure the proper match of main valves to pilot valves:

1. Record main valve and pilot valve S/N's of original POSRV's in plant records.

2. Inspect S/N's for agreement with Step 1, after any disassembly involving removal of pilot valve from main valve.

3. Make sure the set pressures of the main valve and pilot valve are identical.

4. Check O-Ring and Seals Kit material code to ensure they are the same for main valve and pilot valve.

Any discrepancies should be promptly reported to the appropriate plant authority.

Specify parts required by:

1. Part Name (for Nomenclature, refer to Figures 1- 3) 2.

Part Number (if known) 3. Quantity

Contact Parts Marketing: 1-318-640-2250

In addition, the main valve serial number is stamped on the top edge of the outlet flange. Be sure to include the one or two letters preceding the figures in the serial number. Typical valve nameplates are shown in Figures 18 and 19.

Table 5

Recommended Spare Parts
Pilot Operated Safety Relief Valves (POSRV)
for 4900-3 Series 49PV and 49MV

Class	Part Name	Quantity Parts
I	**Main Valve** O-Ring Kit **Pilot Valve** O-Ring Kit	Class I parts should be stocked at the rate of one (1) per valve. Maintaining this level of spare parts will provide replacement parts for 70% of possible maintenance requirements.
II	**Main Valve** Tube Fittings (2) **Pilot Valve** Main Pilot Piston Modulator Stop O-Ring Retainer Discharge Connector Test Plug Screen Inlet Connector	Class II parts should be stocked at the rate of one (1) part per each five (5) valves in the population. Class II parts will provide replacement parts for an additional 15% of possible maintenance problems.

Note: A combination of Class I and II parts will satisfy maintenance requirements 85% of the time.

Engineering Instructions

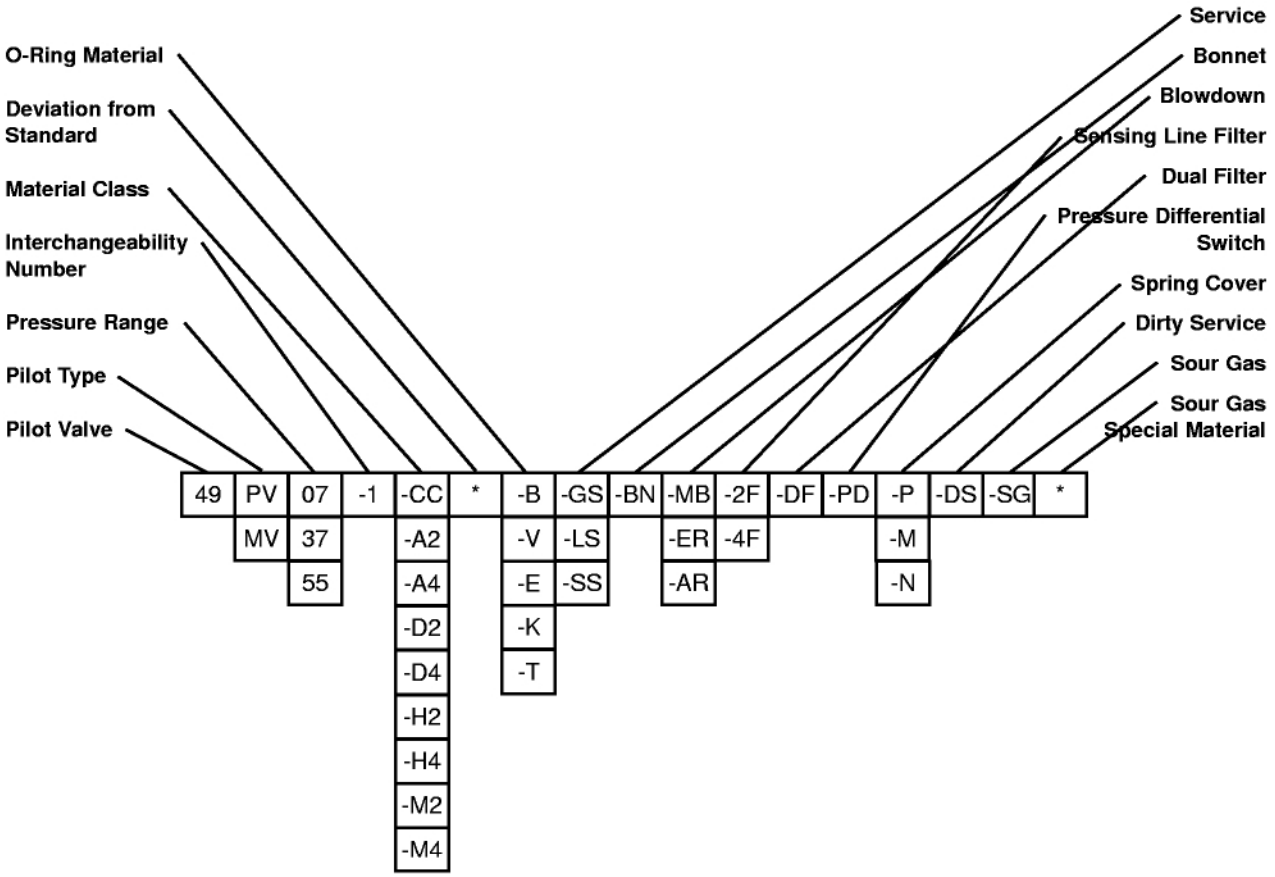

Pilot Type
PV = Pop Pilot
MV = Modulating Pilot

Pressure Range
07 = 15 to 750 psig
37 = 751 to 3750 psig
55 = 3751 to 5500 psig

Material
CC = Standard Material
A2 = Alloy 20 Wetted (consult factory)
A4 = Entirely Alloy 20 (consult factory)
D2 = Duplex Wetted (consult factory)
D4 = Entirely Duplex (consult factory)
H2 = Hastelloy C Wetted
H4 = Entirely Hastelloy C
M2 = Monel Wetted
M4 = Entirely Monel

O-Ring Material
B = Buna (Nitrile)
V = Viton (Fluorocarbon)
E = Ethylene Propylene
K = Kalrez
T = Teflon

Service
GS = Gas
LS = Liquid
SS = Steam

Blowdown
MB = Manual Blowdown
ER = Electronic Remote
AR = Air Remote

Sensing Line Filter
AUX. = High Capacity Filter
1F = CC
2F = SST
3F = CC w/Flush Valve
4F = SST w/Flush Valve

Spring Cover
P = Peek
M = Metal
N = None

Bonnet
Yoke (Standard, no code)
BN = Closed Bonnet

High Capacity Filter Option
2F = Stainless Steel
4F = Stainless Steel w/Flush Valve

Table 6
Single Outlet Main Valve O-Ring Kits (4905, 4910, 4912, 4914, and 4916)

Size	Orifice	Teflon Kit	O-Ring
1" x 2"	D,E, F	MORK-60T	310AA213
1 1/2" x 2"	D,E, F	MORK-60T	310AA213
1 1/2" x 3"	G, H	MORK-61T	310AA326
2" x 3"	G, H, J	MORK-61T	310AA326
3" x 4"	J, K, L	MORK-62T	310AA331
4" x 6"	L, M, N, P	MORK-63T	310AA339
6" x 8"	Q, R	MORK-64T	310AA432
8" x 10"	T	MORK-65T	310AA438

Note: Where "AA" is the material designation, refer to nameplate or factory for ordering.

Table 7
Dual Outlet Main Valve O-Ring Kits (4905, 4910 and 4912)

Size	Teflon Kit	O-Ring
3" x 4"	MORK-63T	310AA339
4" x 6"	MORK-66T	310AA344
6" x 8" x 8"	MORK-65T	310AA438
8" x 10" x 10"	MORK-67T	310AA444
10" x 10" x 10"	MORK-68T	310AA449

Note: Where "AA" is the material designation, refer to nameplate or factory for ordering.

Table 8
Pilot Valve O-Ring, Diaphragm and Seal Kits

Pilot Type	Buna-N	Ethylene/Propylene	Viton
49PV01 GS and LS	PORKF-31B	PORKF-31E	PORKF-31V
49PV07 GS and LS	PORKF-33B	PORKF-33E	PORKF-33V
49PV37 GS and LS	PORKF-35B	PORKF-35E	PORKF-35V
49MV01, 07, and 37LS*	PORKF-34B	PORKF-34E	PORKF-34V
49MV01, 07, and 37GS*	PORKF-32B	PORKF-32E	PORKF-32V

** In addition to this PORKF kit, the comparable PV PORKF kit is also required. For example, a 49MV01LS with Viton O-Rings would require a PORKF-34V and a PORKF-31V.*

Table 9
O-Ring, Diaphragm and Seal Kits for Options*

Option	Buna-N	Ethylene/Propylene	Viton
Backflow Preventer	PORKF-37B	PORKF-37E	PORKF-37V
-	Teflon only	-	-
Filter	SP540-GKIT	-	-

** These kits fit all pilot models.*

XVIII. Manufacturer’s Field Service, Training and Repair Program

A. Field Service

Utilities and Process Industries expect and demand service on a moment's notice. CONSOLIDATED' Field Service can be depended upon for prompt response, even in extreme off-hour emergency situations.

Dresser maintains the largest and most competent field service staff in the Industry. Service Engineers are located at strategic points throughout the United States to respond to customer's requirements for service. Each Service Engineer is factory trained and long experienced in servicing Safety Valves. Dresser Service Engineers restore disc and nozzle critical dimensions which affect valve performance and are capable of modernizing valves in the field.

It is highly recommended that the professional talents of a Dresser Field Service Engineer be employed to make final field adjustments during the initial setting of all CONSOLIDATED® POSRV's.

All Field Service Engineer's activities are coordinated from the Alexandria, Louisiana, Field Service Office. Upon receipt of a purchase order number authorizing the trip, the service engineer is dispatched.

Contact: Field Service Dept., Field Service Supervisor, (318) 640-6055.

B. Factory Repair Facilities

The factory at Alexandria, Louisiana maintains a CONSOLIDATED' Repair Center. The Repair Department, in conjunction with the manufacturing facilities, is equipped to perform specialized repairs and product modifications, e.g. butt-weld, bushing replacements, code welding, pilot replacement, etc.
Contact: Repair Dept., Mgr. Valve Repair, (318) 640-6057. C. Safety Relief Valve Maintenance Training
Rising costs of maintenance and repair in the Utility and Process Industries indicate the need for trained maintenance personnel. Dresser Industrial Valve Operation conducts service seminars that can help your maintenance and engineering personnel to reduce these costs.

Seminars, conducted either at your site, or at our Alexandria, Louisiana manufacturing plant, provide participants with an introduction to the basics of preventive maintenance necessary to minimize downtime, reduce unplanned repairs and increase valve safety. While these seminars do not make "instant" experts, they do provide the participants with "Hands On" experience with CONSOLIDATED' Valves. The seminar also includes valve terminology and nomenclature, component inspection, trouble shooting, setting and testing, with emphasis on the ASME Boiler and Pressure Vessel Code.

For further information, please contact the product Training Manager by fax at (318) 640-6041, or telephone (318) 6406054.

Notes:

Service Departments

Location of Service Engineers

LOUISIANA, Alexandria 1

GEORGIA, Atlanta 2

INDIANA, Crawfordsville 3

KENTUCKY, Maysville 4

PENNSYLVANIA, Philadelphia 5

SOUTH CAROLINA, Charleston 6

VIRGINIA, Richmond 7

THE DRESSER FIELD SERVICE ORGANIZATION IS UNEQUALED

For prompt field service, please call Dresser Service Department,
Alexandria, Louisiana. • Normal Working Hours – (318) 640-6055
After Hours, Weekends, Holidays – (318) 640-2250

Sales Office Locations

UNITED STATES

Dresser Flow Control
Dresser, Inc.
LA Hwy. 3225 @ US Hwy. 167 N
P.O. Box 1430
Alexandria, Louisiana 71309-1430
Telephone: 1-318-640-2250
Fax: 1-318-640-6222

Northern Region
Dresser Flow Control
Dresser, Inc.
85 Bodwell Street
Avon, Massachusetts 02322
Telephone: 1-508-586-4600
Fax: 1-508-941-5497

Southern Region
Dresser Flow Control
Dresser, Inc.
11100 West Airport Blvd.
Stafford, TX 77477-3014
Telephone: 1-281-568-2211
Fax: 1-281-568-6731

BRAZIL

Dresser Industria E Comercio Ltda
Rua Senador Verqueiro, 433
09521-320 Sao Caetano Do Sul
Sao Paulo, Brazil
Telephone: (55) 11-4224-7444
Fax: (55) 11-4224-7488

CANADA

DI Canada, Inc.
5010 North Service Road
Burlington, Ontario, L7L 5R5 Canada
Telephone: 1-905-335-3529
Fax: 1-905-336-7628

DI Canada, Inc.
#333-5th Ave. SW, Suite 1100
Calgary, Alberta
T2P 3B6 Canada
Telephone: 1-403-290-0001
Fax: 1-403-299-1526

CHINA

Dresser Flow Control
Suite 2403, Capital Mansion
6 Xinyuannan Road, Chao Yang District
Beijing , China 100040
Telephone: 86-10-6466-1164
Fax: 86-10-6466-0195

FRANCE

Dresser Produits Industriels, S.A.S.
4 Place de Saverne
92971 Coubevoie
Telephone: 33-1-49-04-90-00
Fax: 33-1-49-04-90-20

GERMANY

Dresser Valve Europe
Klein-Kollenburg Strasse 78-80
P.O. Box 1208
47877 Willich, Germany
Telephone: (49) 2156-91890
Fax: (49) 2156-41058

ITALY

Dresser Italia S.r.L.
Masoneilan Operation
Via Cassano 77
P.O. Box 123
80020 Casavatore (Naples), Italy
Telephone: (39) 81-789-2111
Fax: (39) 81-789-2259

JAPAN

Nigata Masoneilan Co. Ltd.
Dresser Flow Control
20TH Floor Marive East Tower
WBG 2-6 Nakase, Mihama-Ku,
Chiba-shi, Chiba 261-7120 Japan
Telephone: (81)-43-297-9222
Fax: (81)-43-299-1115

KOREA

Dresser Korea, Inc.
#2107 Kuk Dong Building
60-1, 3-Ka, Choongmu-ro, Chung-Ku
Seoul, Korea
Telephone: (82)-2-274-0792
Fax: (82)-2-274-0794

MALAYSIA

Dresser Flow Control
Far East Regional Office
Business Suite 19A-9-1, Level 9
UOA Centre, No. 19 Jalan Pinang
50450 Kuala Lumpur, West Malaysia
Telephone: (60-3) 2163-2322
Fax: (60-3) 2163-6312

MEXICO

Dresser Valve Mexico, S.A. de C.V.
Av. Henry Ford No. 114 Esq. Fulton
Fraccionamiento Ind. San Nicholas
54030 Tlalnepantla, Estado de Mexico
Telephone: (52) 5-310-9863
Fax: (52) 5-310-5584

SAUDI ARABIA

Dresser Al Rushaid Valve
& Instrument Co., Ltd.
P.O. Box 10145
Jubail Industrial City 31961
Kingdom of Saudi Arabia
Telephone: (966) 3-341-0278
Fax: (966) 3-341-7624

SINGAPORE

Dresser Singapore, Pte. Ltd.
Dresser Flow Control
16, Tuas Avenue 8
Singapore 639231
Telephone: (65) 861-6100
Fax: (65) 861-7172

SOUTH AFRICA

Dresser Limited, South Africa Branch
Dresser Flow Control
P.O. Box 2234, 16 Edendale Road
Eastleigh, Edenvale 1610
Republic of South Africa
Telephone: (27) 11-452-1550
Fax: (27) 11-452-2903

Dresser Flow Control
Plot 90, Ajose Adeogun Street
Victoria Island, Lagoe
Lagos, Nigeria
Telephone (23) 41-2620765
Fax (23) 41-2620768

SPAIN

Dresser Flow Control
Masoneilan, S.A.
C/ Murcia 39 C
08830 Sant Boi de
Barcelona, Spain
Telephone: (34) 93-652-6430
Fax: (34) 93-652-6444

UNITED ARAB EMIRATES

Dresser Flow Control
Middle East Operations
P.O. Box 61302
Jebel Ali Free Zone
United Arab Emirates
Courier:
Units Nos. JA01 + JA02
Roundabout 8
Jebel Ali Free Zone
United Arab Emirates
Telephone: (971) 4-838752
Fax: (971) 4-838038

UNITED KINGDOM

DI U.K.
Unit 4, Suite 1.1
Nobel House
Grand Union Office Park
Packet Boat Ln.
Uxbridge, Middlesex
England UB8 2GH
Telephone: (44) 1895-454900
Fax: (44) 1895-454919
Telex: (851) 627039

Dresser U.K. Ltd.
East Gillibrands
Skelmersdale, Lancashire
England WN8 9TU
Telephone: (44) 1695-52600
Fax: (44) 1695-50569

DRESSER
Flow Control

Dresser, Inc.
Alexandria, Louisiana
71309-1430 (USA)